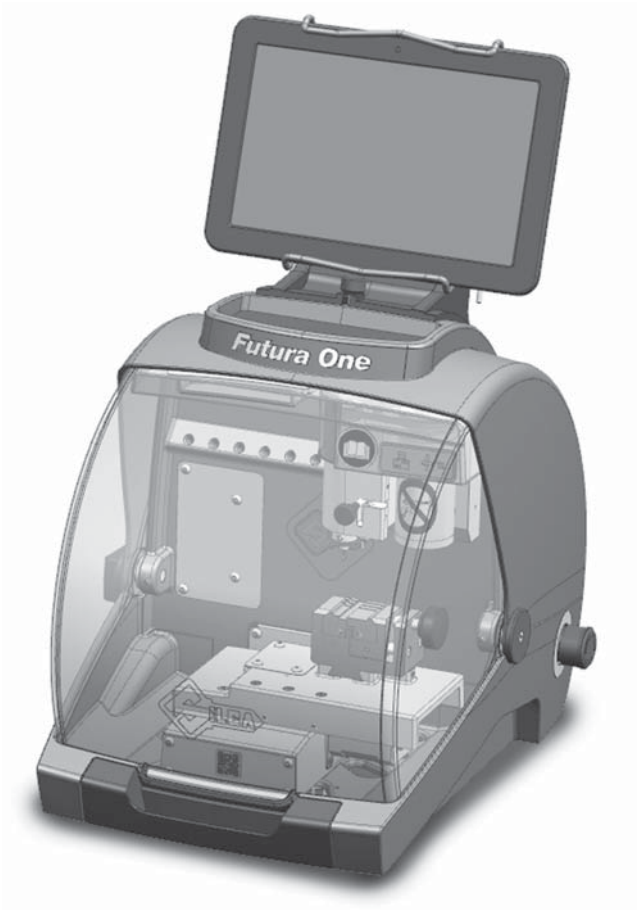

FUTURA ONE
FUTURA ONE ABUS®

Operating Manual

Original Instructions

D444460XA

vers. 3.0

EN

Edition: Junio 2015

Printed at Vittorio Veneto
Da SILCA S.p.A.
Via Podgora, 20 (Z.I.)
31029 VITTORIO VENETO (TV) - Italy

The Manufacturer declines any responsibility for possible inaccuracies in this document due to printing or transcription errors. The Manufacturer reserves the rights to alter the information without prior notice, except when they affect safety. This document or any of its parts cannot be copied, altered or reproduced without written authorization from the Manufacturer. Keep the manual and look after it for the entire life cycle of the machine. The information has been drawn up by the manufacturer in his own language (Italian) to provide users with the necessary indications to use the key-cutting machine independently, economically and safely.

IMPORTANT NOTE: in compliance with current regulations relating to industrial property, we hereby state that the trade-marks or trade names mentioned in our documentation are the exclusive property of authorized manufacturers of locks and users.
Said trade-marks or trade names are nominated only for the purposes of information so that any lock for which our keys are made can be rapidly identified.

® Registered Trademark

INDEX

USE OF THE MANUAL 1

GENERAL WARNINGS 4

1 MACHINE DESCRIPTION 5

1.1 MAIN OPERATING PARTS 6

1.2 SAFETY 7

1.3 TECHNICAL DATA 8

1.4 ACCESSORIES PROVIDED 9

2 HANDLING 10

2.1 PACKING 10

2.2 UNPACKING 10

2.3 HANDLING THE MACHINE 10

3 MACHINE INSTALLATION AND PREPARATION 11

3.1 CHECKING FOR DAMAGE 11

3.2 ENVIRONMENTAL CONDITIONS 11

3.3 POSITIONING 11

3.4 SEPARATE PARTS 12

3.4.1 TABLET STAND AND TABLET 12

3.4.2 POWER PACK AND LEAD 13

3.4.3 FIXING BRACKET 13

3.5 WORK STATION DESCRIPTION 14

4 TABLET REGULATION AND USE 15

4.1 CHOICE OF LANGUAGE 15

5 CLAMP FOR DIMPLE AND TRACK KEYS - 01R 17

5.1 FITTING THE KEY 17

5.1.1 DIMPLE KEYS 17

5.1.2 TRACK TYPE KEYS 18

5.2 REMOVING / FITTING CLAMP 01R 18

5.3 REMOVING/FITTING THE JAWS ON CLAMP 01R 19

5.4 USING TRACER 01T 20

5.5 TRACER 02T 20

6 CLEANING 21

7 MAINTENANCE 22

7.1 OPERATIONS 22

7.2 ACCESS TO REAR COMPARTMENT 22

7.3 CUTTER AND/OR TRACER POINT REPLACEMENT 23

7.4 TRACER 01T REPLACEMENT 23

7.5 CHECKING AND REPLACING FUSE 24

7.6 BATTERY REPLACEMENT 25

8 DECOMMISSIONING 26

9 ASSISTANCE 27

9.1 HOW TO REQUEST SERVICE 27

10 ELECTRICAL DIAGRAMS 29

SOFTWARE GUIDE 1SW

CE DECLARATION

USE OF THE MANUAL

This manual has been drawn up by the Manufacturer and is an integral part of the machine literature.
The manual gives information that is obligatory for the operator to know and which makes it possible to use the machine safely.

User's Manual
This user's manual is provided because it is essential for proper use and maintenance of the machine.
The manual must be kept carefully throughout the life of the machine, including the decommissioning stage. Keep in a dry place close to the machine where it is always to hand for the operator.

IT IS OBLIGATORY to read the manual carefully before using the machine.

Readers' characteristics
This manual must be read and its contents acquired by those who will use it.

Manufacturer's ID
FUTURA ONE has an ID plate located on the back of the machine, showing the serial number.

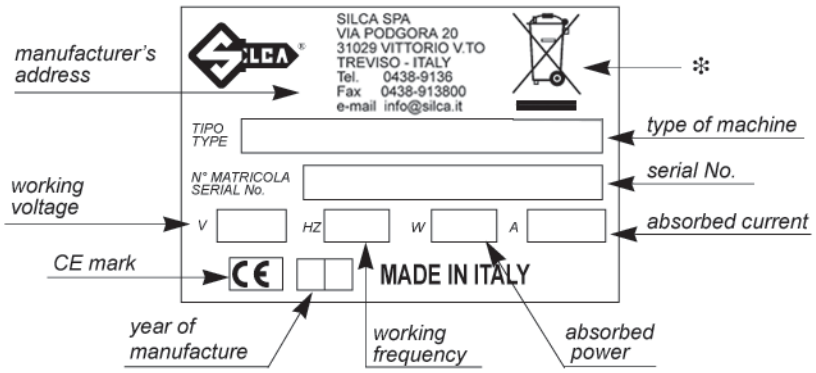

Fig. 1

(*) see chap. 8 DECOMMISSIONING.

How to apply for after-sales service
Silca provides purchasers of FUTURA ONE with After-Sales Service.
For the total safety of the operator and machine, any operation not described in the manual must be carried out by the manufacturer or in the special Service Centers recommended by Silca.
At the end of the manual there is a list of manufacturers' and authorized Service Centre addresses.
The warranty card attached to the machine covers free repairs or replacement of faulty parts for 24 months from the date of purchase*. All operations must be agreed by the user with Silca or the Service Center.

** Damage caused by negligence or wrong use of the machine by the user will null the warranty.*

TERMINOLOGY

For those inexperienced in the subject of keys and key cutting, below is an illustration of the most frequently used terms:

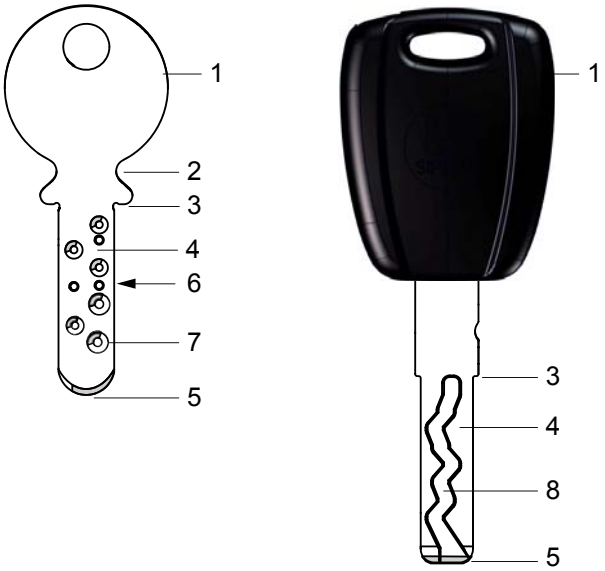

Fig. 2

1) Head	3) Shoulder stop	5) Tip	7) DIMPLE cutting
2) Neck	4) Blade (stem)	6) Back	8) TRACK cutting

GRAPHICS IN THE MANUAL

		
Pay attention	Obligation to read the manual	QR* code

GRAPHICS ON THE FUTURA ONE KEY-CUTTING MACHINE

		
Do not clean with compressed air	Obligation to read the manual	QR* code


Adhesive label Mass - RPM

(*) A QR code is a two dimensional bar code used to memorize information to be read by means of a mobile phone or smart phone. Read the QR code on the machine to connect to useful and constantly updated information relating to key-cutting machine maintenance, useful tips for your FUTURA ONE key-cutting machine and see the continuously evolving range of optional accessories.

Get the free mobile app at
http://gettag.mobi

GENERAL WARNINGS

FUTURA ONE is designed to the principles of European Standards (CE).
Right from the design stage solutions have been adopted to eliminate hazards for the operator in all the stages of use: handling, regulation, use and maintenance.
The materials used in manufacture and the components employed in using FUTURA ONE are not dangerous and ensure that the machine complies to current standards.
Silca S.p.A. has also experimented and applied numerous technical solutions that allow the key-cutting machine to optimize the quality of the cut keys.
To guarantee maintaining these results over time, please follow the instructions below:

- **Observe the procedures described in this manual;**
- **Always use Original Silca Tools as they are designed to make the best of FUTURA ONE and provide quality key-cutting;**
- **Use Silca/Ilco key blanks, made with top quality materials;**
- **Have the key-cutting machine checked periodically by an authorized Silca After-Sales Service Center (list at the end of this manual);**
- **Always use Silca Original Spare Parts. Beware of imitations!**

NORMAL USE

FUTURA ONE is a key-cutting machine and must be installed and used according to the rules and specifications established by the manufacturer.
The FUTURA ONE key-cutting machine is designed for use on business or industrial premises (e.g. hardware shops, key cutting centers, etc...).
Any other use different from that indicated in this manual will cause the forfeiture of all customers' rights to make claims on Silca S.p.A. and may be an unknown source of hazard for the operator or third parties.

ATTENTION: Negligent use or failure by the operator to observe the instructions in this manual are not covered by the warranty and the manufacturer declines any responsibility in such cases.

RESIDUAL RISKS

No further risks will arise when properly using the FUTURA ONE machine.

SAFETY REGULATIONS

- **Always disconnect the machine when it is not in use or when performing maintenance operations.**
- **Check the electrical wiring periodically; replace any wires that show signs of wear.**
- **Always work with dry hands free of grease or oil.**
- **Never tug on the electricity supply lead and make sure it is not in contact with oil or other liquids, sharp objects or heat. Never remove the grounding pin from the plug. Check that the ground wire is connected properly.**
- **Do not use the machine in dangerous environments (wet or damp).**
- **All visitors, especially children, must stay at a safe distance from the machine and must never come into contact with the electric wiring.**

1 MACHINE DESCRIPTION

FUTURA ONE is an electronic machine operating on 3 axes with controlled movement.
Accurately studied, it adds a high degree of cutting precision to operating speed and ease of use.

FUTURA ONE operates only when connected to a TABLET containing a Silca program.

It uses a tracer to decode keys with dimple and/or track cuts.

It can cut keys (in ferrous materials in general, brass, silver nickel, etc.) having:

- **Dimple cuts**
- **Track cuts**
- **Special cuts (e.g. Ford Tibbe - with optional accessory)**
- **Cuts on tubular keys (with optional accessory)**

FUTURA ONE is used to cut the following types of keys:

Keys with DIMPLE and/or TRACK CUTS

FUTURA ONE - FUTURA ONE ABUS®

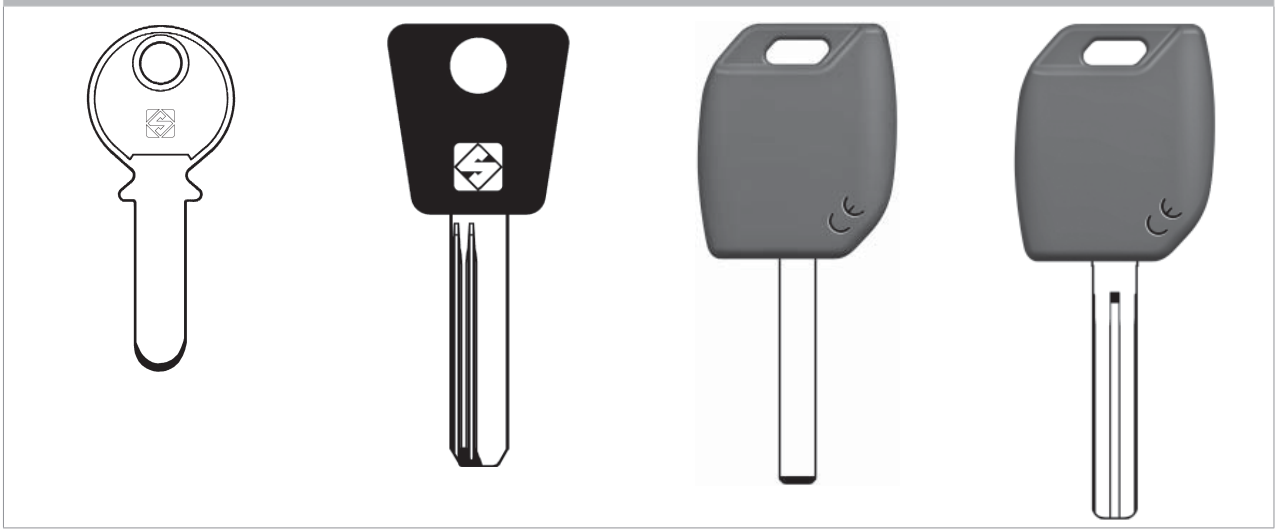

Fig. 3

FUTURA ONE ABUS®

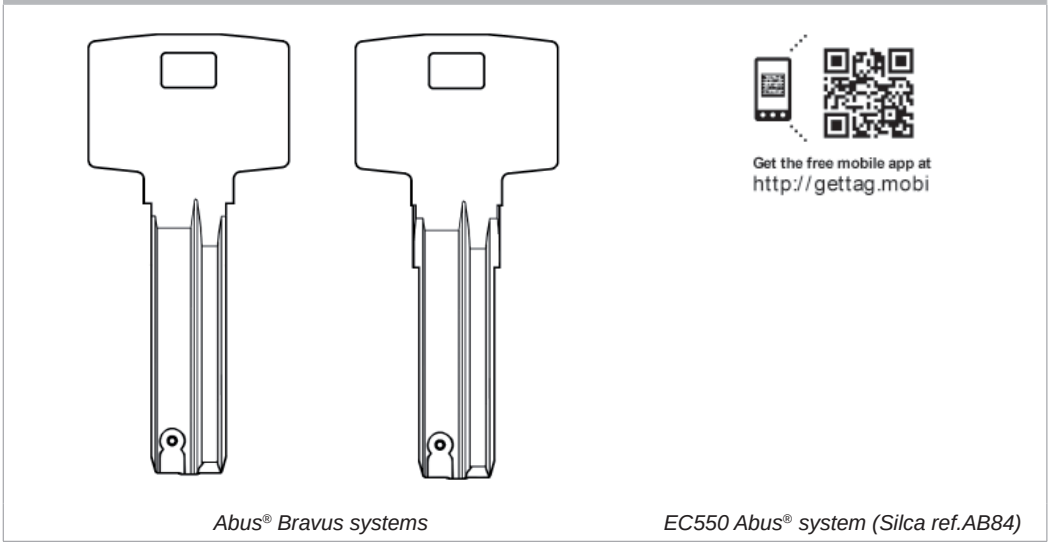

Abus® Bravus systems *EC550 Abus® system (Silca ref.AB84)*

Fig. 4

1.1 MAIN OPERATING PARTS

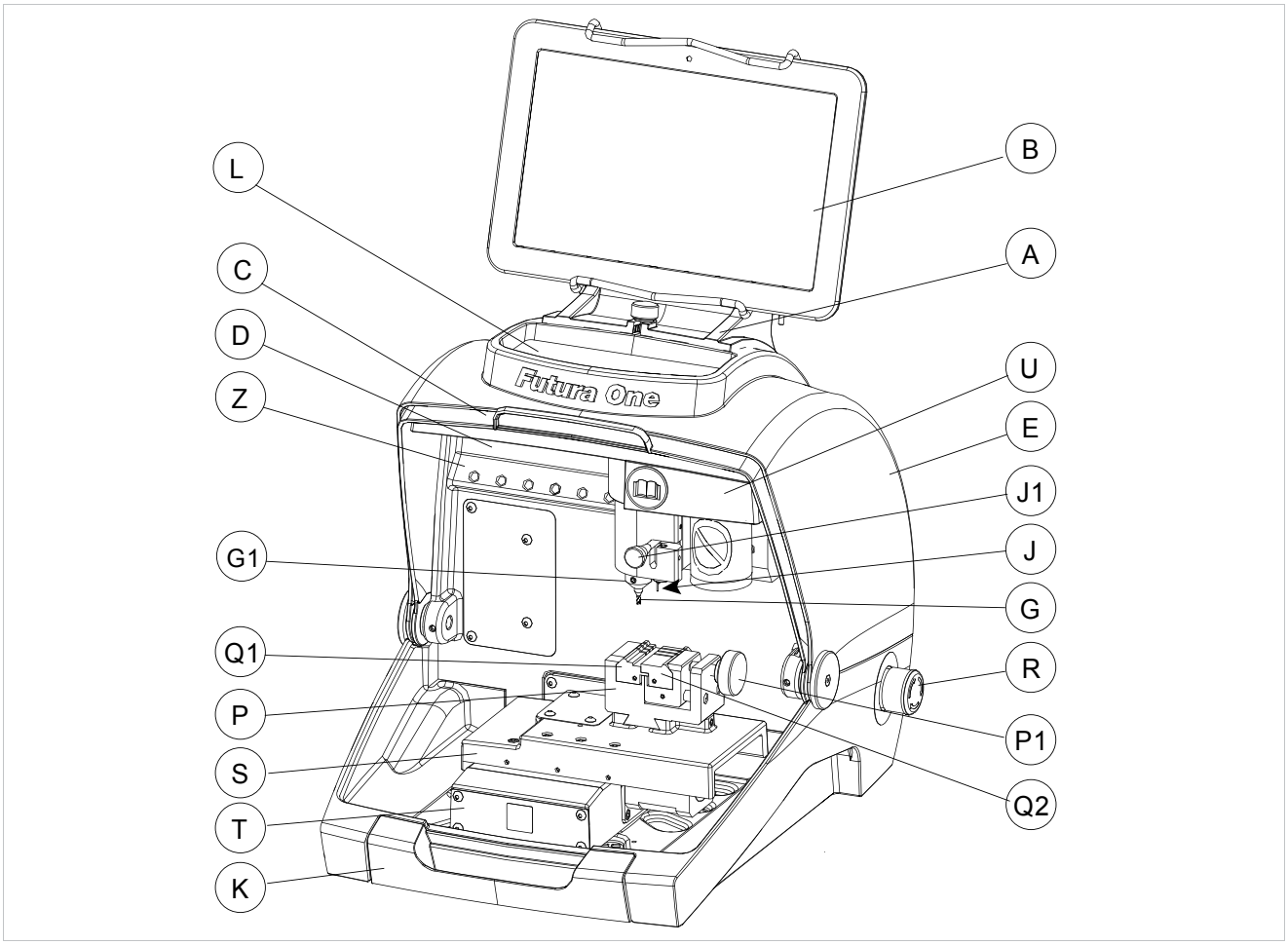

Fig. 5

A - Tablet stand
B - Tablet
C - Safety shield
D - Lamp
E - Cover
G - Cutter (Dimple/Track cuts)
G1 - Cutter shaft (Dimple/Track cuts)
J - Tracer 01T
J1 - Tracer movement lever
L - Tool compartment
K - Swarf collection tray
P - Clamp 01R (Dimple/Track cuts)
P1 - Clamp knob (01R)
Q1 - Left-hand jaw
Q2 - Right-hand jaw
R - ON/Emergency push button
S - X axis carriage
T - Y axis carriage
U - Z axis carriage
V - Ethernet port
W - Power pack
W1 - Power pack connector
Y - USB port
Z - Tool holder

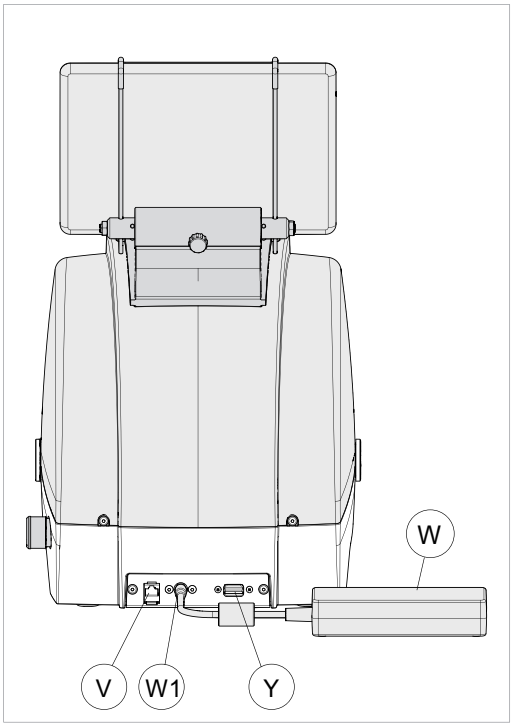

Fig. 6

1.2 SAFETY

FUTURA ONE is entirely built in compliance to the Machine Directives. The operations for which it has been designed are easily carried out with no risk to the operator.
The adoption of general safety precautions and observation of the instructions provided by the manufacturer in this manual eliminate all human error, unless deliberate.
FUTURA ONE is designed with features which make it completely safe.

- **Safety shield**

The protective shield is designed to cover the working parts as completely as possible, ensuring operator safety.
The shield (C) must be raised in order to f t keys for cutting or carry out other operations (Fig. 7).
Raising the shield by means of a microswitch will deactivate the operating and movement functions, including the cutter, and failed shield closing will be notif ed with a special message on the tablet.
To re-activate the work cycle, lower the shield and follow the instructions on the tablet.

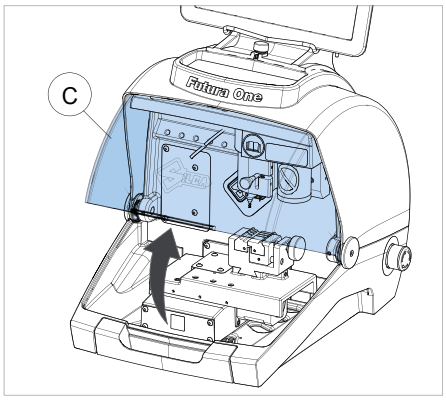

Fig. 7

- **Emergency stop**

Use the red emergency button (R) (Fig. 5), located on the right-hand side of the machine to stop the machine immediately in the event of serious malfunctioning or a hazard for the operator.
When the cause of the emergency has been eliminated, turn the button 45° clockwise to deactivate it.

NOTE: the operator is responsible for keeping the area around the button clear so that it can be reached as quickly as possible.

1.3 TECHNICAL DATA

Electricity supply:	**Machine:** 24V d.c. - 2,2 Amp. - 55W **Power pack:** 90/264V a.c. - 50/60Hz - 120W - MEANWELL GS120A24-P1M
Cutter motor:	24V d.c.
Cutter (Dimple cuts):	in HSS Super Rapid steel
Cutter (Track cuts):	in HSS Super Rapid steel, coated
Tool speed:	7000 rpm
Movement:	on 3 axes (with special bushes) driven by step motors (on rectif ed roller guides)
Futura ONE **Clamp 01R** **(for Dimple/Track cuts)**	removable and provided with interchangeable jaws: 01J - 02J
Futura ONE ABUS® **Clamp 01R** **(for Dimple/Track cuts)**	removable and provided with interchangeable jaws: 01J - 02J 05J - 06J 29J - 30J
Runs:	X axis: 30 mm Y axis: 50 mm Z axis: 27 mm
Dimensions:	width: 318 mm depth: 413 mm height with tablet and stand: 522 mm (340 mm without tablet and stand)
Mass:	Kg. 19
Noise level:	sound pressure Lp(A) = - brass dimple keys: 70.0 dB(A) - brass track keys: 74.0 dB(A) - steel track keys: 75.0 dB(A)

1.4 ACCESSORIES PROVIDED

FUTURA ONE and FUTURA ONE ABUS® come with a set of accessories for operation and maintenance (tools, hex wrenches...) supplied in a special tool kit comprising:

FUTURA ONE - FUTURA ONE ABUS®		
stop bar 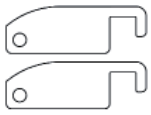	cutter 01D 	2 mm allen key 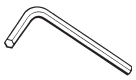
stylus touch pen 	tracer point 02T 	2,5 mm allen key 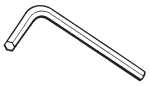
universal adapter 	fresa 01L (only on Futura ONE) 	3 mm allen key 
slanted brush 	fuses 4 Amp.- delayed 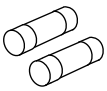	“T” allen key 2,5 mm 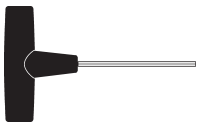

Cutters and tracers on machine:	Separately:
tracer point 01T 	f xing bracket 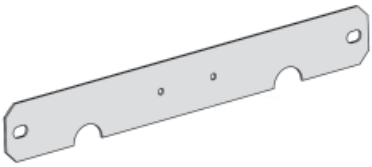

FUTURA ONE ABUS®: additional accessories provided		
cutter 07D 	05J jaw 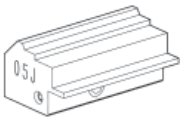	06J jaw 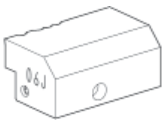
cutter 03L 	29J jaw 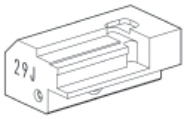	30J jaw 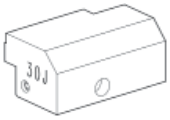

2 HANDLING

The FUTURA ONE key-cutting machine is easy to handle and there are no special hazards involved in moving it. The packed machine can by carried manually by one person.

2.1 PACKING

The packing for the FUTURA ONE key-cutting machine ensures safe handling of the machine and all its components.
Packing comprises expanded plastic material wrapped around the machine.
The robust cardboard box in which it is placed and the nylon wrapping protect the machine even when stored for a long period.

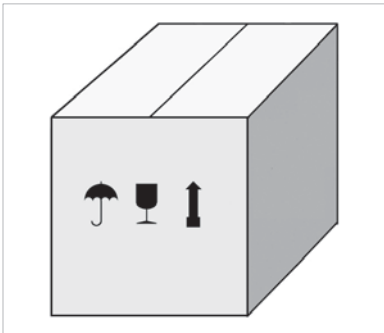

Fig. 8

Keep dry

Handle with care

Up

The symbols on the outside of the cardboard box give indications for transport.

ATTENTION: keep the complete packing for future machine transfers.

2.2 UNPACKING

To remove the machine from its packing:

1) Cut the strapping with scissors and remove.
2) Open the box carefully without damaging it.
3) Free the machine from the protective shells.
4) Check the contents of the packing, comprised of:
   - FUTURA ONE key-cutting machine
   - documentation comprising: user's manual, spare parts sheet, specialist guide and warranty
   - tablet
   - tablet stand
   - power lead
   - power pack
   - tool kit
   - f xing bracket

2.3 HANDLING THE MACHINE

Once removed from its packing place FUTURA ONE directly on the work bench; one person can easily perform this operation.

ATTENTION: lift the machine by holding onto the base. Never lift the machine by gripping the clamps, levers or other parts.

3 MACHINE INSTALLATION AND PREPARATION

Installation is the customer's task and does not require any special skills.
The key-cutting machine is supplied ready for use and does not need calibration except for the tools to be used and any additional jaws that are included with the machine; however , the operator is required to make certain checks and prepare the machine for use.

NOTE: the machine is shipped with a steel rod installed in the cutter shaft to prevent the allen screw from backing out during transit. REMOVE THE ROD AND INSTALL THE PROPER CUTTER PRIOR TO ATTEMPTING TO CUT A KEY!

3.1 CHECKING FOR DAMAGE

FUTURA ONE is a solid compact machine and will not break if handling, unpacking and installation are carried out to the instructions in this manual. However, it is good practice to check that the machine has not been damaged.

3.2 ENVIRONMENTAL CONDITIONS

To make the most of the key-cutting machine, bear in mind the following environmental parameters: it is advisable for the area to be dry with good air circulation.
The optimum environmental conditions for machine operation are:

- temperature 10° C to 40°C;
- relative humidity: approx 60%.

3.3 POSITIONING

1) Place the key-cutting machine on a solid horizontal work bench suitable for the weight of the machine (19 Kg). The work bench should be approximately 100-120 cm high to facilitate access to the working parts. We recommend leaving at least 30 cm clearance behind and around the machine to ensure good ventilation and facilitate handling (Fig. 9).
2) Make sure machine voltage is suitable for the mains supply and that the latter is earthed with a differential switch.
3) Connect the power lead (power pack) to the machine (chap.3.4.2).

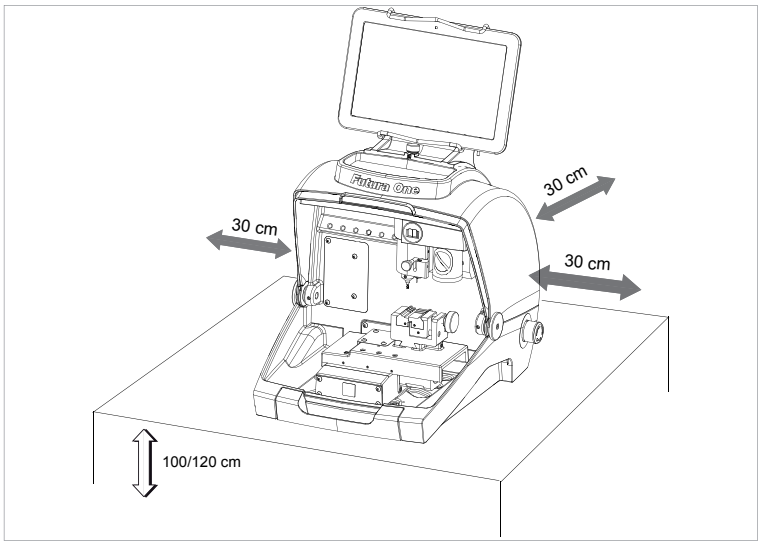

Fig. 9

3.4 SEPARATE PARTS

The machine packing also contains the following components, separately packed:

3.4.1 Tablet stand and tablet

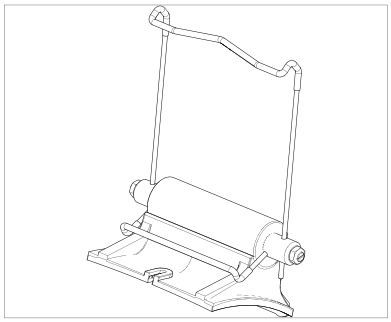

Fig. 10

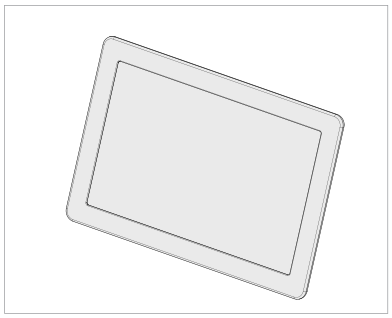

Fig. 11

These items are separate from the machine and must be unpacked and installed by the operator in the way described below:

1) Remove the 2 items from their packing.
2) Loosen the knob on top of the machine cover (Fig. 12).
3) Install the tablet stand so that the special prof le f ts into the slot on the machine cover (Fig. 13).
4) Screw down and tighten the knob to secure the tablet stand to the cover (Fig. 14).
5) Fit the tablet into its stand (Fig. 15).

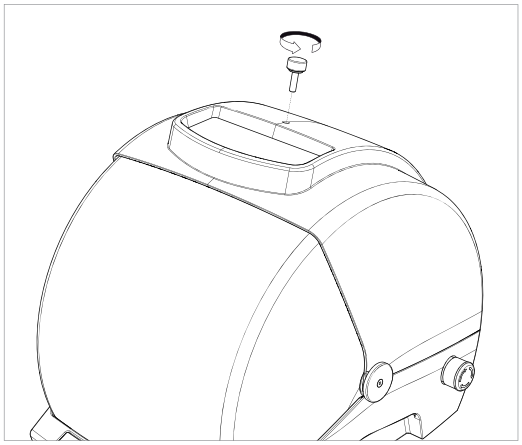

Fig. 12

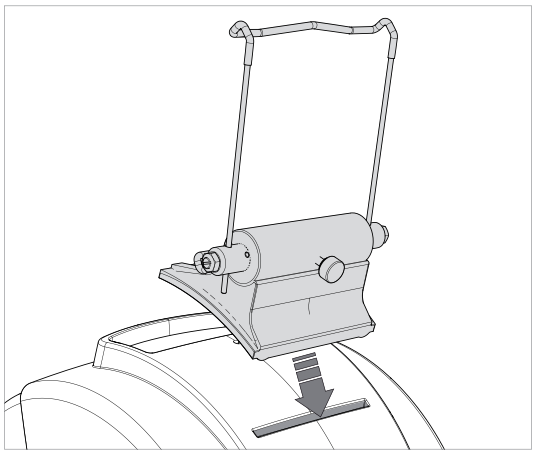

Fig. 13

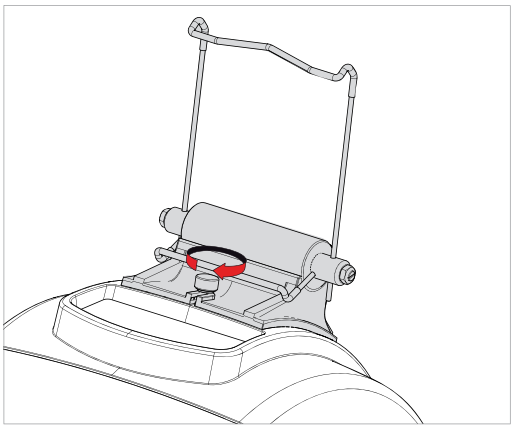

Fig. 14

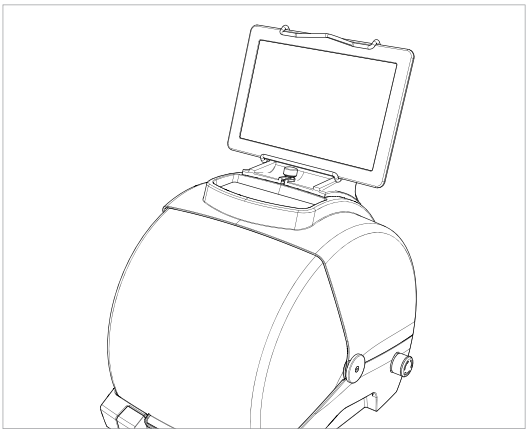

Fig. 15

6) Connect the tablet USB/Micro USB cable to the special receptacle on the tablet and then to the power supply.

3.4.2 Power pack and lead

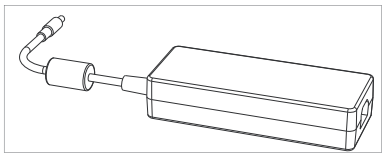

Fig. 16

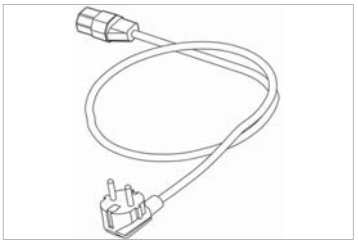

Fig. 17

Connect FUTURA ONE to the power pack (W) and connect the latter to the power supply with the power lead (W2).

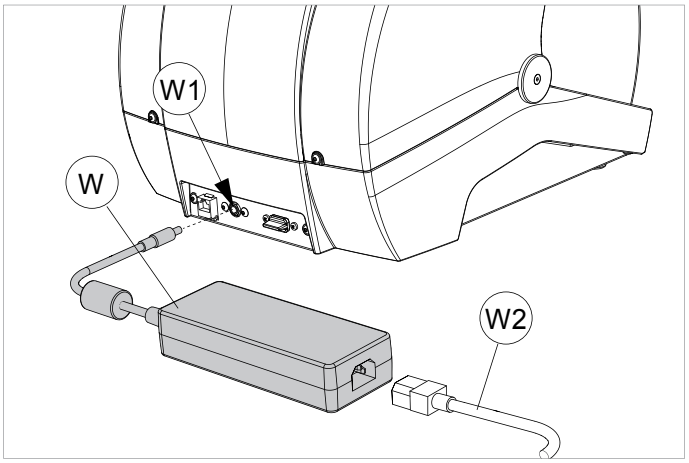

Fig. 18

3.4.3 Fixing bracket

If the key-cutting machine is transported and used on a vehicle, e.g. a van, it must be prepared as follows:

1) Turn off the machine and detach the power lead.
2) Remove the tablet holder and tablet.
3) Turn the key-cutting machine onto its back.
4) Connect the f xing bracket to the machine and secure with the 2 screws.
5) Return the machine to its upright position on the work top.

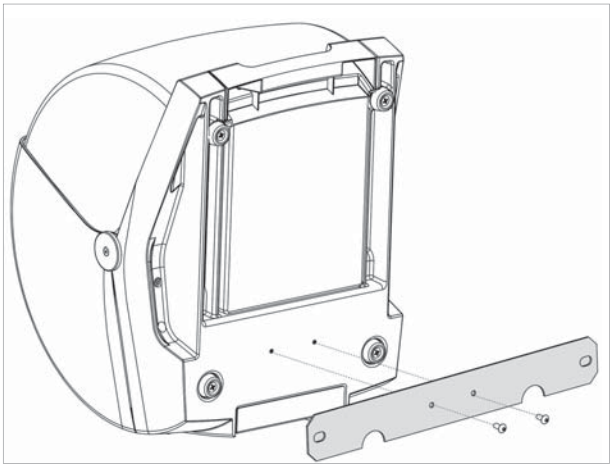

Fig. 19

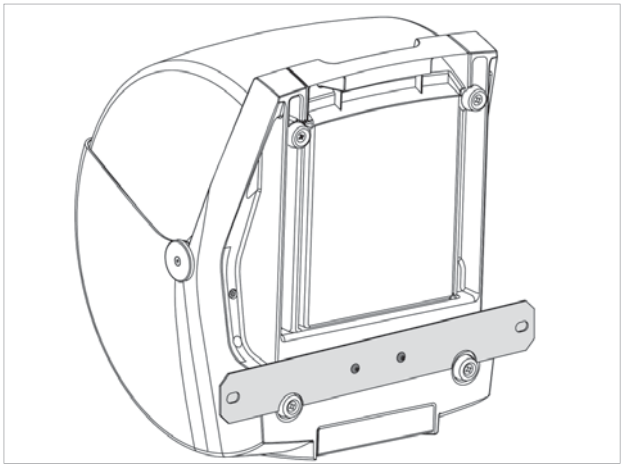

Fig. 20

3.5 WORK STATION DESCRIPTION

One operator is enough to operate the machine, which has the following operating parts:

- **General ON/OFF/emergency button (R) located on the right-hand side of the machine**
- **Key holding clamp (P)**
- **Tablet (B)**
- **Tablet ON button (B1)**
- **Safety shield (C)**
- **Cutter (G)**

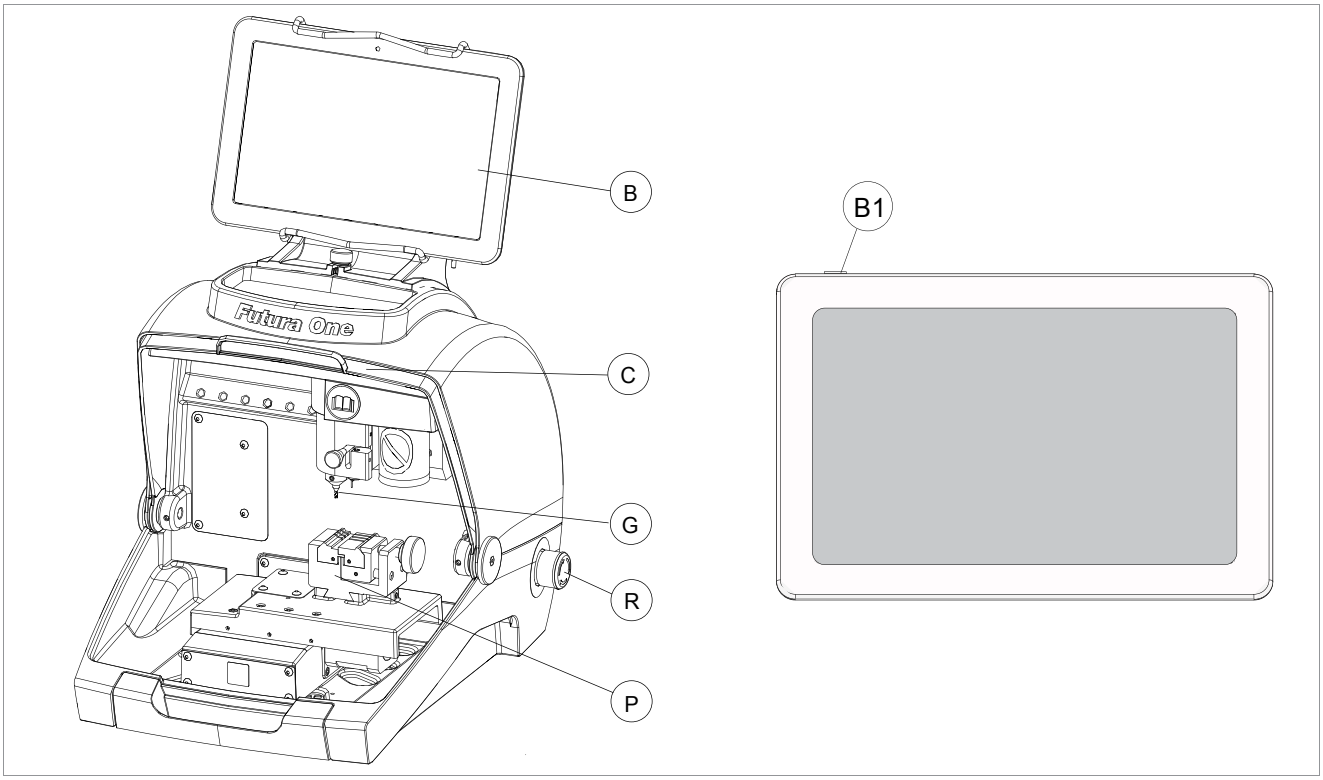

Fig. 21

4 TABLET REGULATION AND USE

1) Connect the tablet to a power source by means of its power pack in order to charge it (3 hours for the f rst charge). Plugging the tablet into the USB port on the back of the FUTURA ONE machine will not provide enough power to fully charge the tablet. The USB port will provide a trickle charge and may extend the battery life while the tablet is used. The tablet should be plugged into a main power supply to fully re-charge the battery daily.
2) Turn on the tablet by holding down the push button (B1) (Fig. 21) holding it down for a few seconds.

REGULATING TABLET INCLINATION

1) Loosen the knob (B2).
2) Incline the stand as required.
3) Tighten the knob (B2).

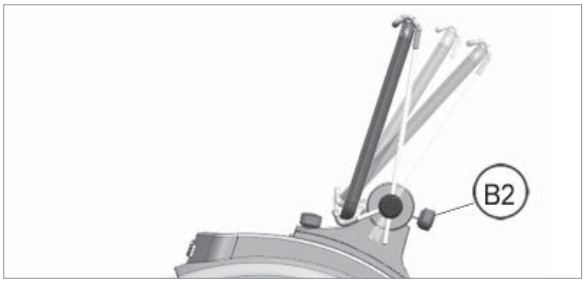

Fig. 22

4.1 CHOICE OF LANGUAGE

1) Select “Settings”.

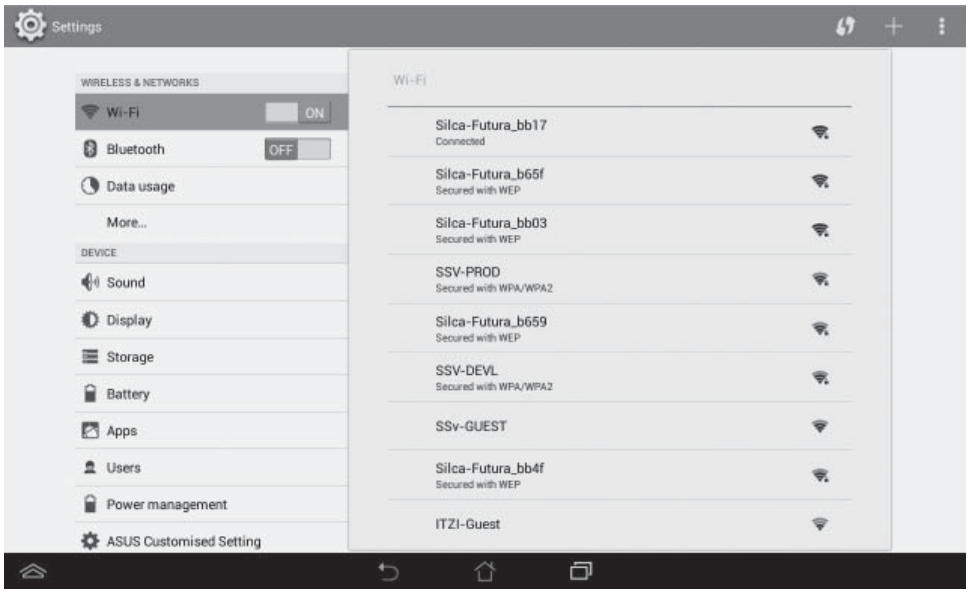

2) Scroll up with your f nger.
3) Select Language & Input and then Language (on the right).

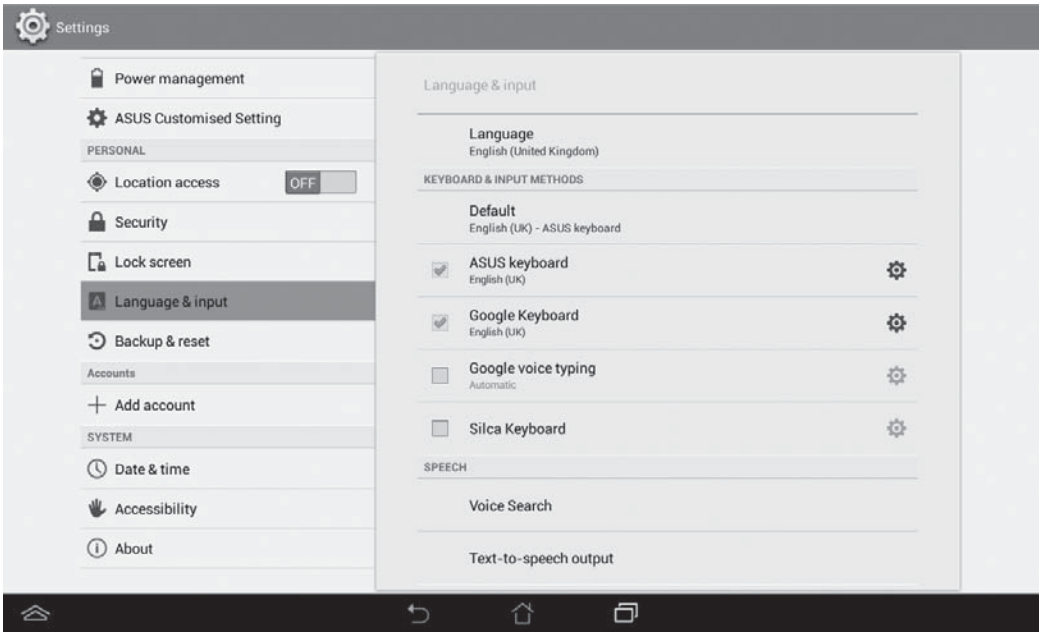

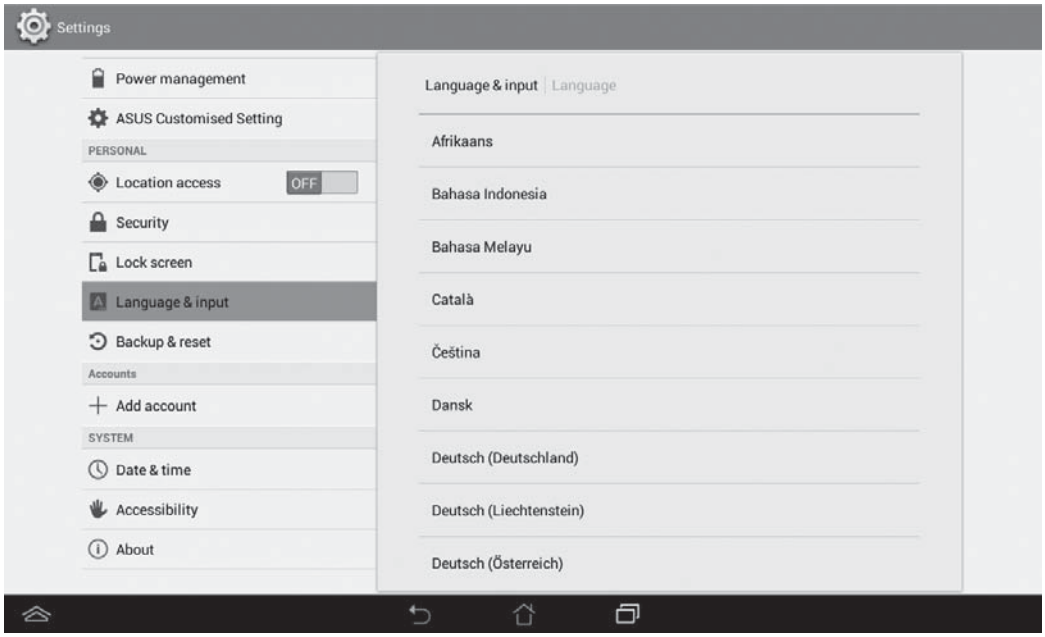

4) Scroll and select the desired language (i.e. English United States).
5) Select Silca Keyboard (if desired)
6) Select Display > Sleep > Never. This will prevent the application from timing out and closing the session.
7) To quit: 

- For all Silca key-cutting machine software functionalities follow the instructions in the SOFTW ARE Guide section in this manual.
- Further instructions are given in the quick guide for the tablet.

5 CLAMP FOR DIMPLE AND TRACK KEYS - 01R

According to the type of key to be decoded and/or cut, follow the instructions in the Silca tablet program regarding:

- **clamp**
- **use of jaws (Q1) and (Q2)**
- **clamp stop (Fig. 24 and Fig. 25)**

5.1 FITTING THE KEY

The clamp is designed to house high security keys with shoulder stop or tip reference.
For shoulder stop keys, place the shoulder of the key against the jaws (stop “0”) (Fig. 24) and the others (tip stop) must be placed against one of the grooves (1-2-3-4), as indicated in the Silca tablet program. For this operation use the bar provided (Fig. 25).

NOTE: the stop bar must be removed before decoding or cutting.

1) Fit the key to be cut into its seat and ensure it is resting f rmly on the clamp plate.
2) Tighten the knob (M) to secure the key.

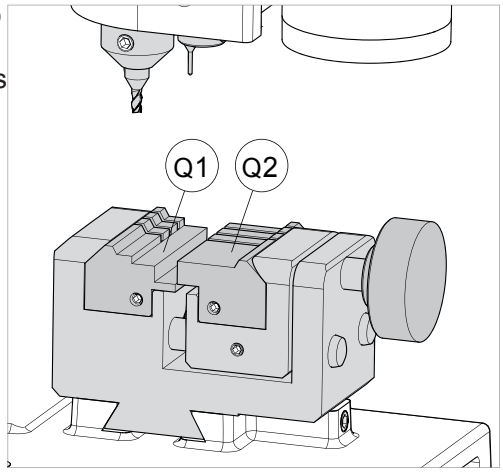

Fig. 23

5.1.1 DIMPLE keys

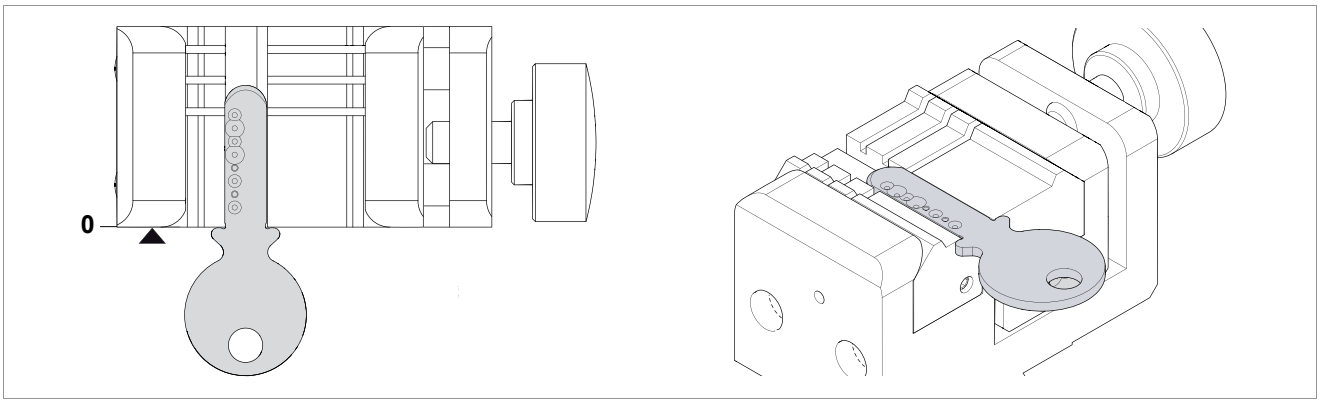

Fig. 24 - SHOULDER STOP

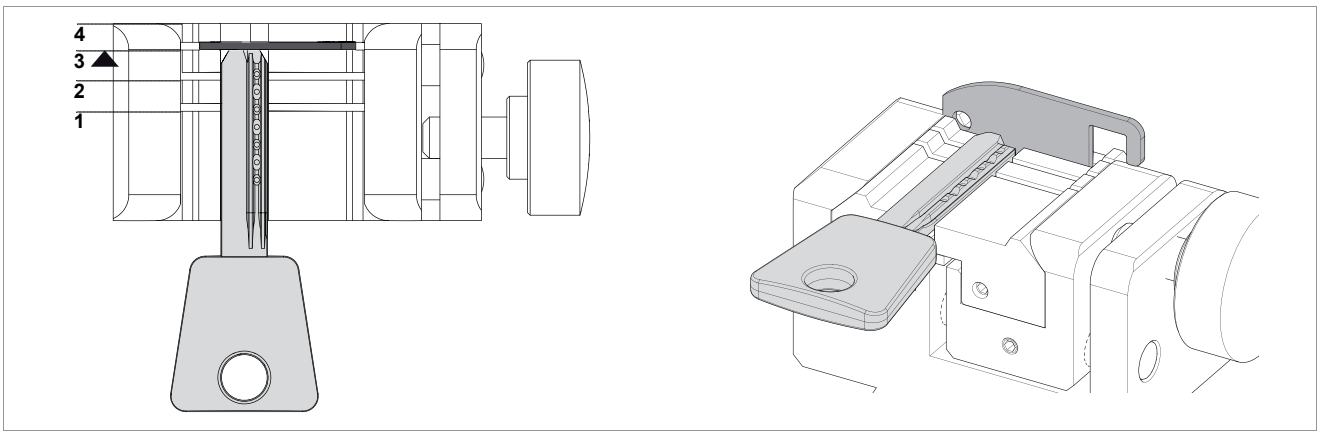

Fig. 25 - TIP STOP

5.1.2 TRACK type keys

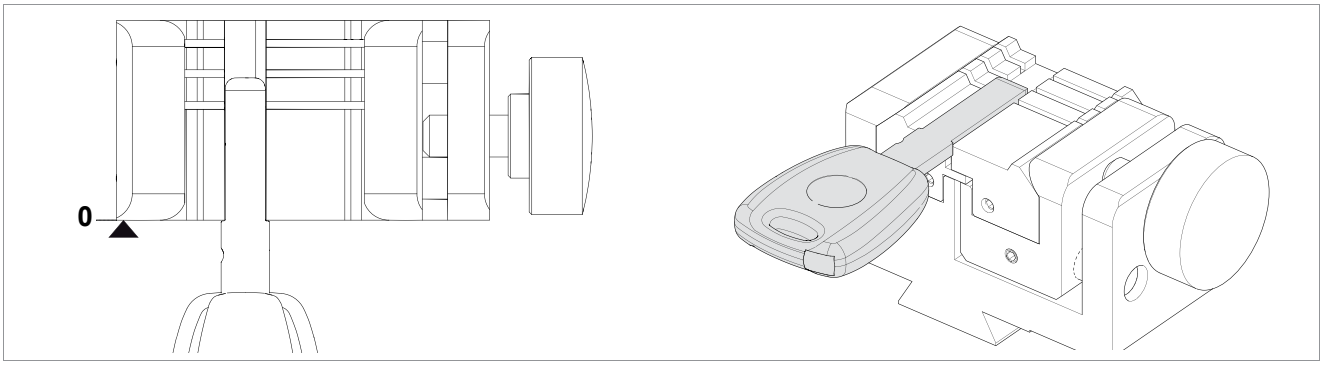

Fig. 26 - SHOULDER STOP

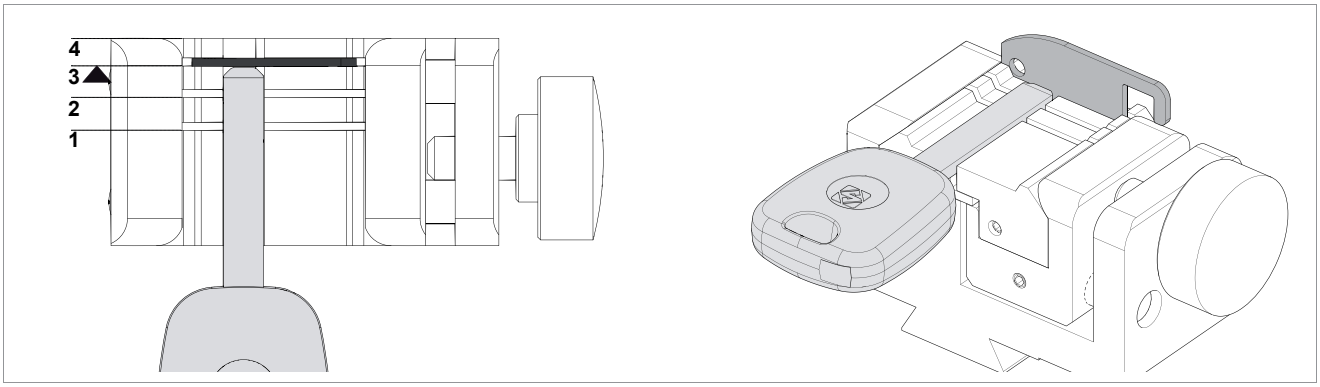

Fig. 27 - TIP STOP

5.2 REMOVING / FITTING CLAMP 01R

1) Raise the safety shield.
2) Loosen the grub screw (P2) and remove the clamp by pulling it towards the operator.
3) Carefully clean the clamp support seat.
4) Clean the clamp before f tting into the support.
5) Fit the clamp (with knob on the right) into the special dovetail and take up against the stop pin.
6) Tighten the grub screw (P2) to secure the clamp.

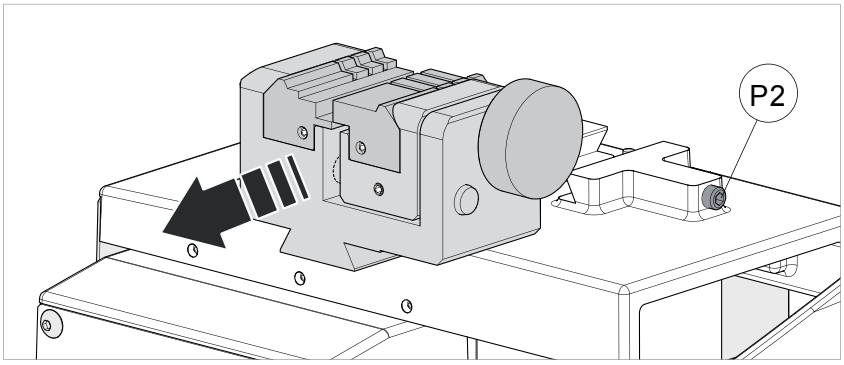

Fig. 28

5.3 REMOVING/FITTING THE JAWS ON CLAMP 01R

1) Raise the safety shield.
2) Loosen the knob (P1) by a couple of turns (Fig. 29).
3) Use your f ngers to pull the jaw to be removed out towards the operator (Fig. 30).
4) Carefully clean the seat of the jaw on the clamp.
5) Clean the jaw before f tting into the clamp.
6) Fit the jaw up against the stop pin.

NOTE: there is only one way to fit the jaw into the clamp.

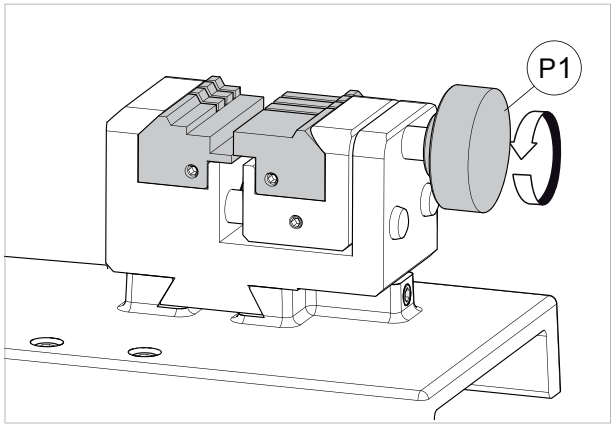

Fig. 29

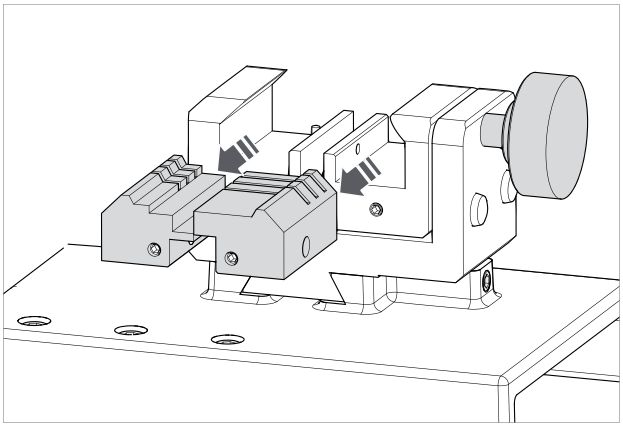

Fig. 30

5.4 USING TRACER 01T

The tracer 01T is used to read/decode both dimple and track keys.
This tracer may or may not be required according to the type of key to be decoded and the dimensions involved.

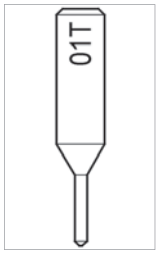

Fig. 31

- **ACTIVATING THE TRACER 01T**

To use the tracer: move the lever (J1) to the left in order to lower the tracer.

- **EXCLUDING THE TRACER 01T**

To take the tracer to the idle position: raise the lever (J1) and move it to the right.

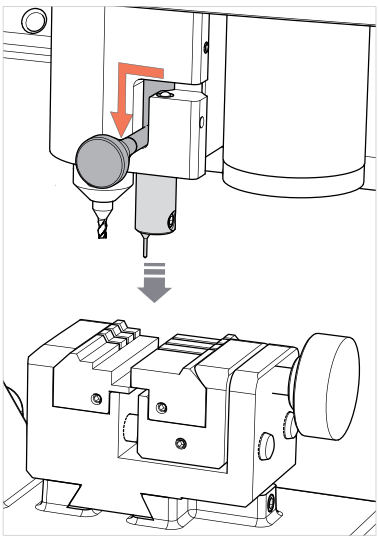

Fig. 32

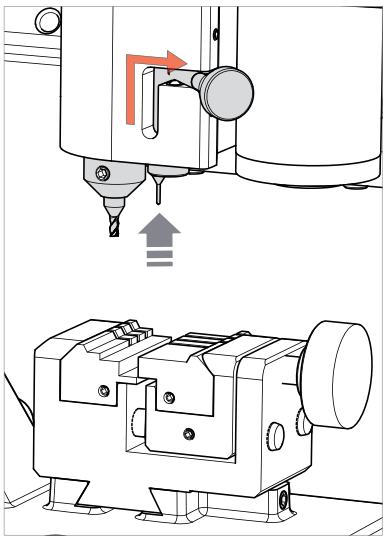

Fig. 33

5.5 TRACER 02T

Some applications may require the use of the 02T tracer. The 02T tracer (when required) should be placed into the cutter shaft (replacing the cutter) (Fig. 35).

Note: f t the new tracer pushing all the way upwards.

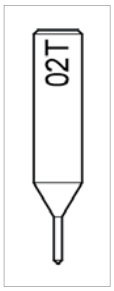

Fig. 34

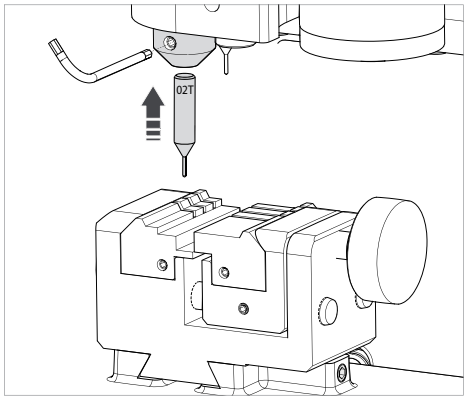

Fig. 35

NOTE: for cutting and/or decoding operations with the tracer point 02T, the tracer 01T must be in the idle position (Fig. 33). REPLACE THE 02T TRACER WITH THE REQUIRED CUTTER PRIOR TO ATTEMPTING TO CUT A KEY.

6 CLEANING

- **Keep the operational parts of the machine as clean as possible by brushing away the chippings in areas where they accumulate during cutting operations.**
- **Under no circumstances should compressed air be used to clear the work zone of chippings as this will blow them onto the moving parts.**
- **Never use oily products or thinners for cleaning painted surfaces, clamps, electrical or electronic connections.**

7 MAINTENANCE

ATTENTION: for repairs or replacement of parts for maintenance, the 'CE'mark is guaranteed only if original spare parts provided by the manufacturer are used.

The FUTURA ONE key-cutting machine does not need special maintenance, but it is good practice to check and if necessary replace parts subject to wear: cutter, tracer point, belt.
Replacement operations are simple and can be performed by the operator.

ATTENTION: DO NOT USE COMPRESSED AIR!

ATTENTION: to maintain machine ef f ciency we recommend using protective oil such as WD40 or similar to apply to the burnished mechanical parts. Make sure the oil does not come into contact with the electronic parts.

Before performing any type of maintenance (checks or replacements) read the warnings below:

- **Do not perform any maintenance operations with the machine on.**
- **Always disconnect the power lead.**
- **Follow the instructions in the manual carefully.**
- **Use original spare parts (see provided spare parts sheet).**

7.1 OPERATIONS

- **Access to rear compartment**
- **Cylindrical cutter and/or tracer point replacement**
- **Tracer 01T replacement**
- **Checking and replacing fuse**
- **Battery replacement**

7.2 ACCESS TO REAR COMPARTMENT

1) Turn off the key-cutting machine and disconnect the power lead.
2) Remove the tablet.
3) Loosen the 2 screws (E1) and the 2 screws (E2).
4) Rotate the cover towards the front of the machine.

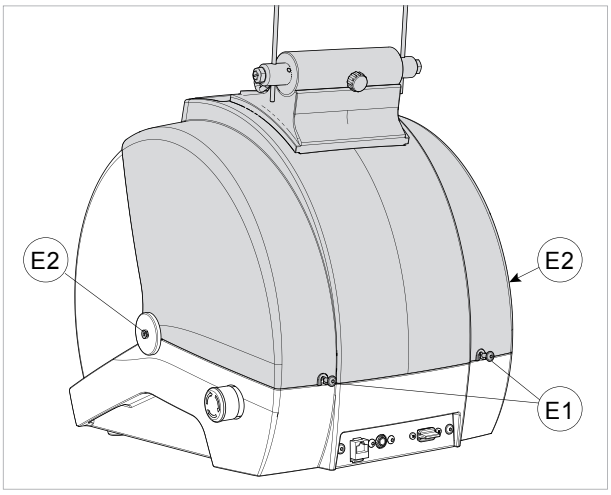

Fig. 36

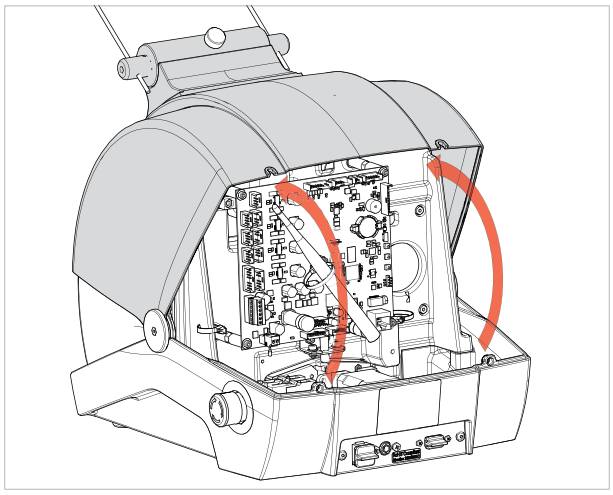

Fig. 37

7.3 CUTTER AND/OR TRACER POINT REPLACEMENT

1) Raise the safety shield.
2) Rotate the cutter shaft (G1) by hand and take the grub screw (G2) to the front of the machine.
3) Use a hex key to loosen the grub screw (G2) and remove the tool.
4) Fit the new tool, pushing all the way upwards.
5) Tighten the grub screw (G2) to secure the tool.

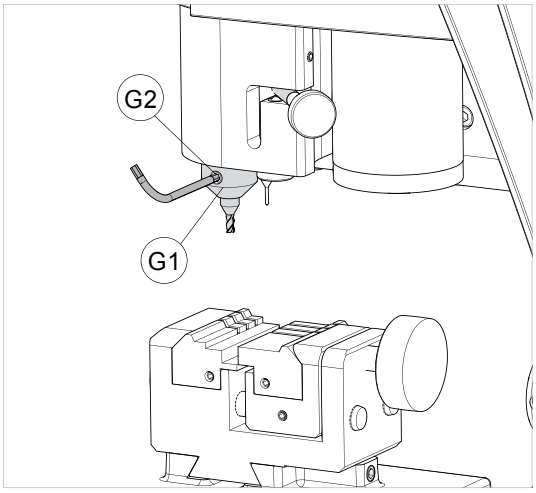

Fig. 38

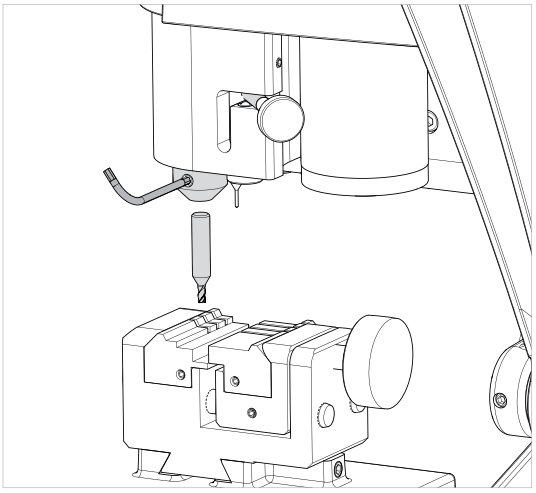

Fig. 39

NOTE: the machine is shipped with a steel rod installed in the cutter shaft to prevent the allen screw from backing out during transit. REMOVE THE ROD AND INSTALL THE PROPER CUTTER PRIOR TO ATTEMPTING TO CUT A KEY!

7.4 TRACER 01T REPLACEMENT

1) Raise the safety shield.
2) Move the lever (J1) to the left to lower the tracer.
3) Use a hex key to loosen the grub screw (J2) and remove the tracer.
4) Fit the new tracer, pushing all the way upwards.
5) Tighten the grub screw (J2) to secure the tracer.

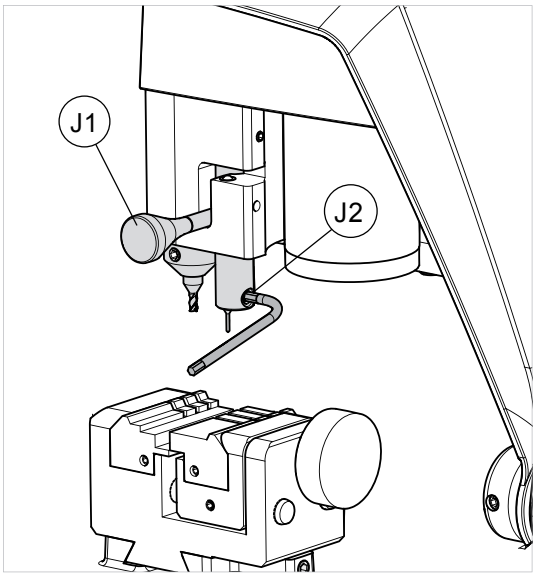

Fig. 40

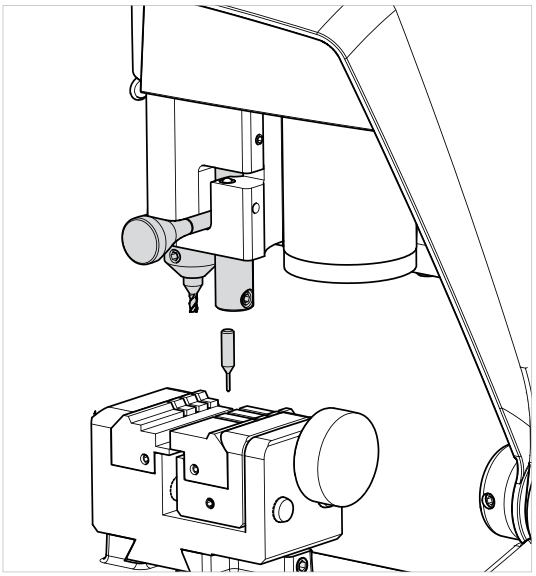

Fig. 41

7.5 CHECKING AND REPLACING FUSE

Fuses should be checked with a tester (ohmmeter, multimeter, etc.) as they may appear to be in good condition even when they are electrically faulty. Fuses must always be replaced with the same amperage and type (rapid or delayed), as indicated in this manual.
FUTURA ONE has 1 fuse:

4 Amps delayed
Protects the cutter motor and their electronic controls (230V a.c.)
To check and/or replace the fuse proceed as follows.

1) Turn the machine off and unplug it from its power supply cable.
2) Access the rear compartment (chap.7.2).

To remove the fuse:
press the fuse cap with your f ngers and turn it counter clockwise.

To f t the new fuse:
carefully position the fuse back into place, then gently press the fuse cap downwards turning it clockwise.

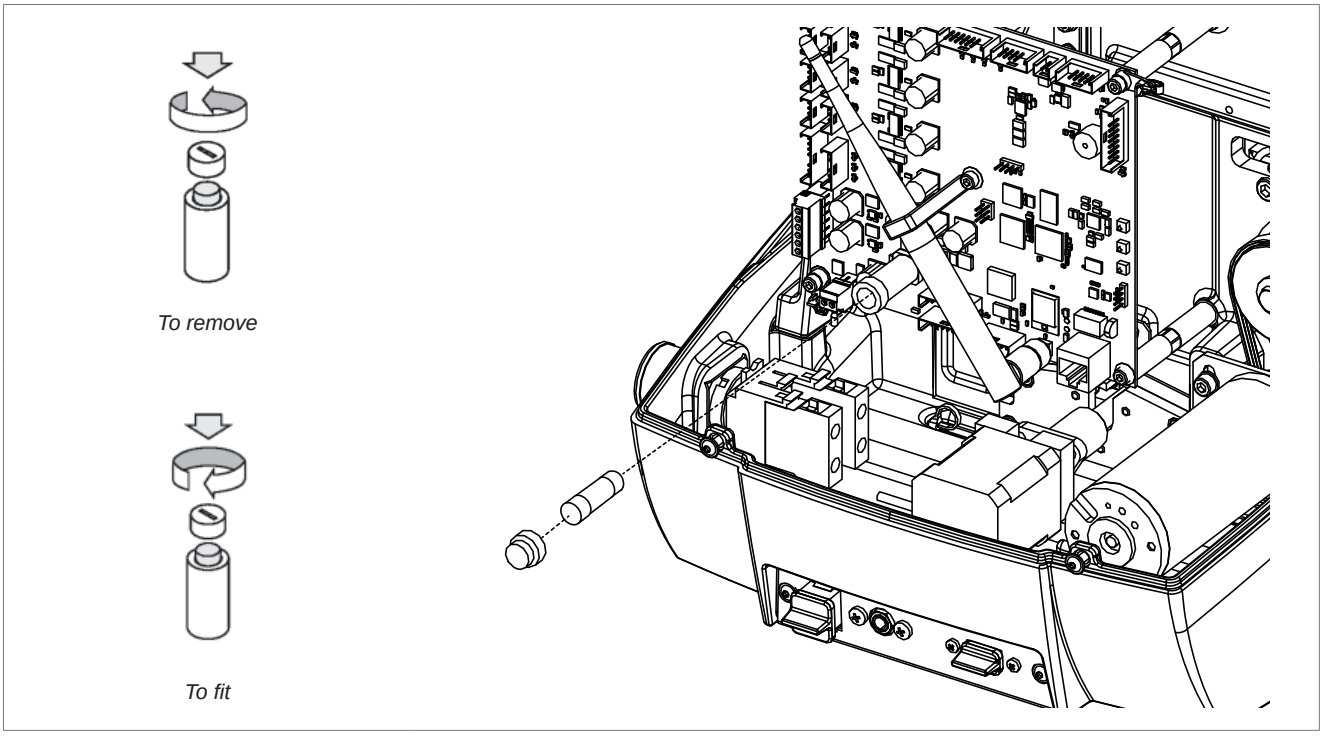

Fig. 42

7.6 BATTERY REPLACEMENT

1) Turn the machine off and unplug it from its power supply cable.
2) Access the rear compartment (chap.7.2).
3) Use insulated screwdriver to remove the f at battery.
4) Insert the new battery into its seat, paying attention to the poles.

ATTENTION: use the same type of lithium battery CR2032 3 Volt.

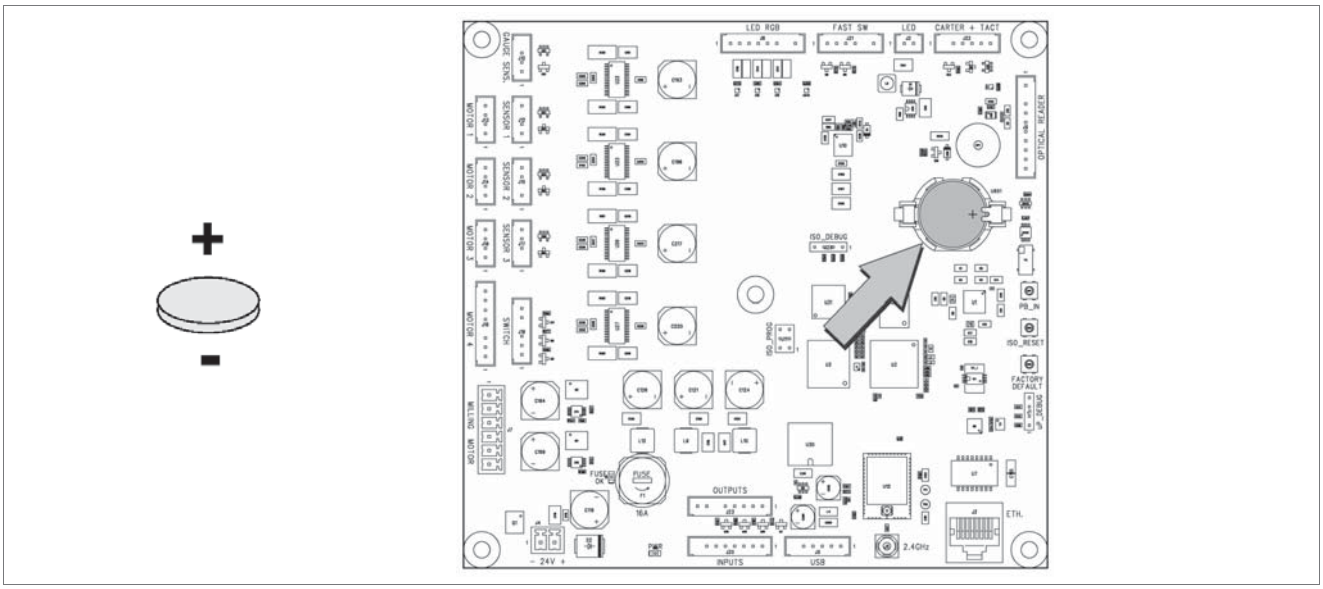

Fig. 43

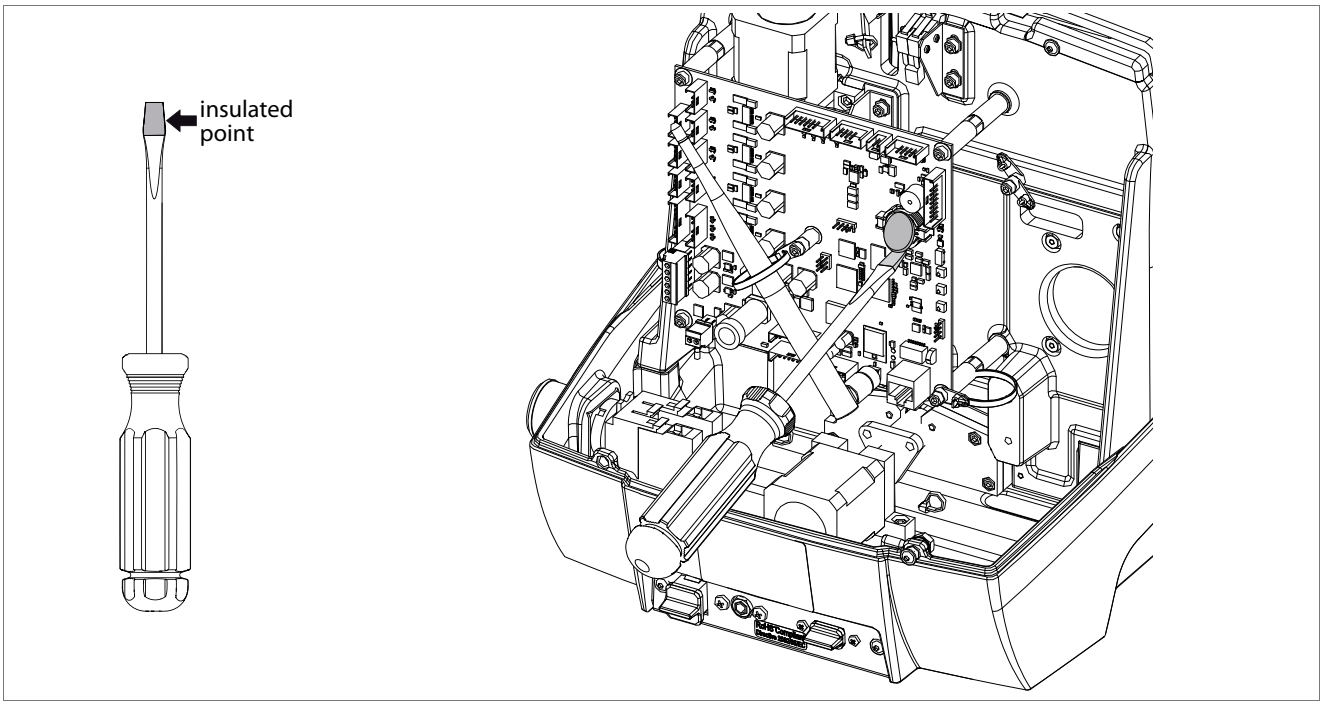

Fig. 44

8 DECOMMISSIONING

To decommission the machine it must be made unusable by:

- **deactivating the power supply;**
- **separating the plastic parts from the metal parts.**
- **Remove the lithium battery from the electronic board.**

ATTENTION: the lithium battery must be disposed of in the special containers.

After doing the above, dispose of the waste in compliance with the current directives in the country where the machine is located.

Waste disposal
CEE regulations lay down special methods for disposing of waste (**).

Machine
FUTURA ONE is not only a durable machine, but is also re-usable.

Recycling is a good environmentally friendly practice.

Packing
The FUTURA ONE device is consigned in a cardboard packing box which can be re-used if undamaged. When it is to be thrown away it is classified as solid urban waste and should be placed in the special paper collecting bins. The protective shell containing the machine is in expanded polyethylene, classified as SUW, and can therefore be placed in an ordinary waste.

Waste from key-cutting
Residue deriving from key cutting is classified as special waste, but can be included in solid urban waste (SUW) as metal scourers. This waste must be disposed of in the special collection centers according to its classification by current laws in Italy and the European Union. If it is contaminated or contains harmful-noxious substances which transform the metal residue included in SUW into harmful-noxious substances, it is included in the lists of the appendices to current regulations in Italy and the European Union for waste disposal.

INFORMATION TO USERS

Under the terms of Directive 2012/19/UE
regarding waste from electric and electronic equipment (WEEE),

- The symbol shown above is also attached to equipment and indicates that it has been placed on the market and must be separated and disposed of when no longer wanted (including all components, sub-assemblies and consumables that are an integral part of the product).
- Please contact SILCA S.p.A. or any other subject on the national registers of other countries in the European Union for information about waste disposal systems for the equipment. Household waste (or of similar origins) can be disposed of by the separate urban waste collection system.
- When purchasing new equipment of an equivalent kind the unwanted equipment can be given back to the dealer. The dealer will then contact the authority responsible for collecting it.
- Separate waste collection of unwanted equipment and its forwarding to treatment, recovery and environmentally friendly disposal makes it possible to avoid potential negative effects on the environment and human health, and assists recycling and recovery of materials.
- Unauthorized disposal of the product by the user is punished by the application of fines established by the countries which have received Directive 2009/98/CE.

(**) wastes are substances or objects deriving from human activity or natural cycles which are discarded, or intended to be discarded.

9 ASSISTANCE

Silca provides full assistance to purchasers of the key-cutting machine. To ensure complete safety for the operator, any job not specif ed in this manual should be carried out by the manufacturer or in the special Service Centres recommended by Silca.
On the back cover of this manual is a list of the manufacturer 's addresses; listed below are the addresses of specialized Service Centers.

9.1 HOW TO REQUEST SERVICE

The guarantee attached to the key-cutting machines ensures free repairs or replacements of faulty parts within 24 months of purchase. All other service calls must be arranged by the customer with Silca or with a Silca service center.

10 ELECTRICAL DIAGRAMS

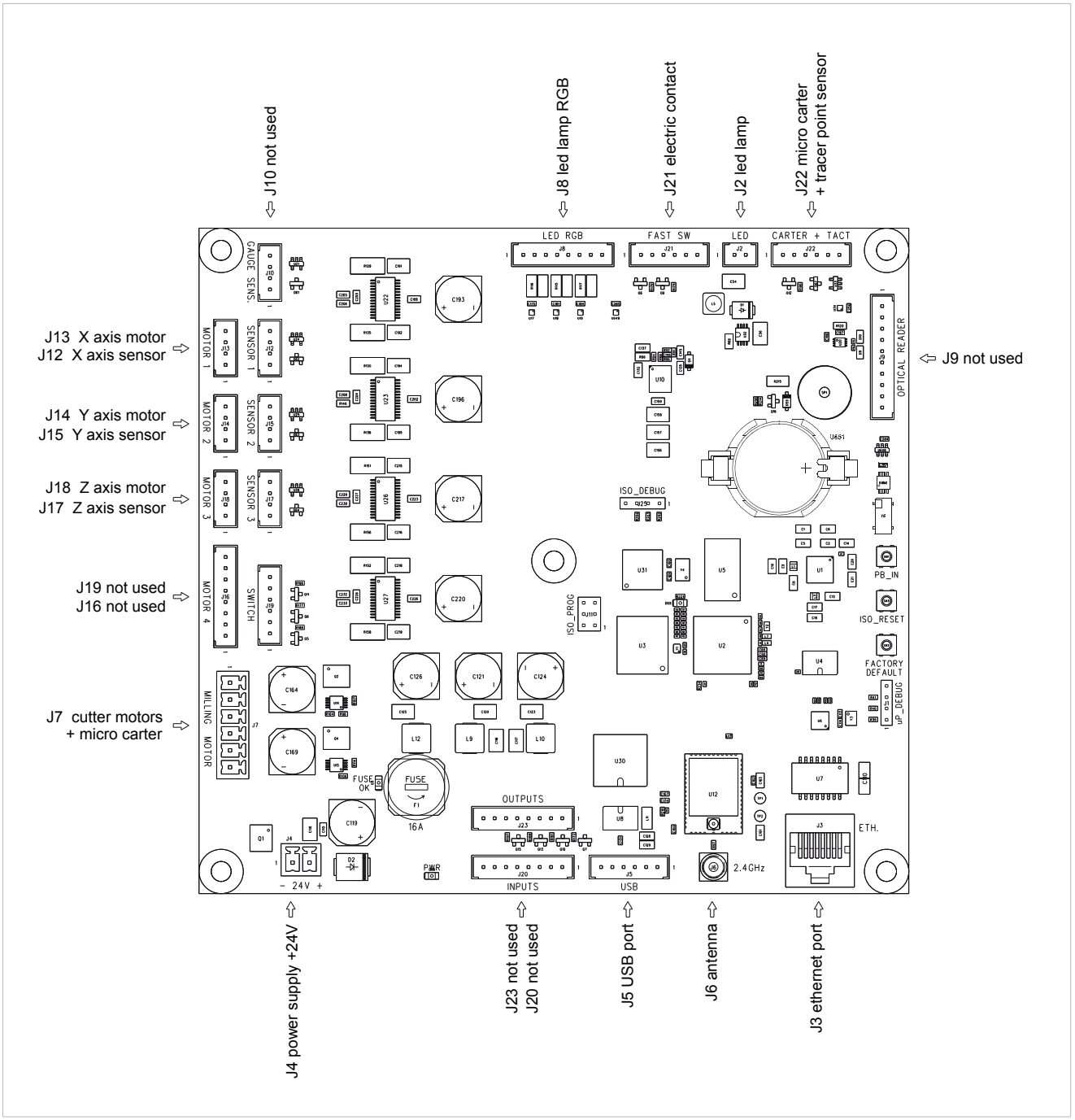

STEP MOTOR X AXIS

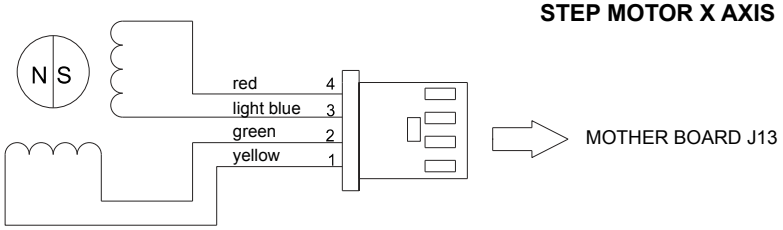

STEP MOTOR Y AXIS

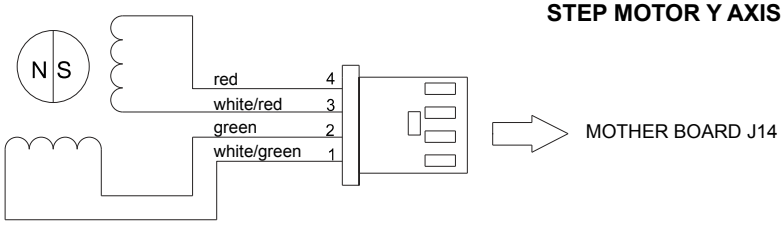

STEP MOTOR Z AXIS

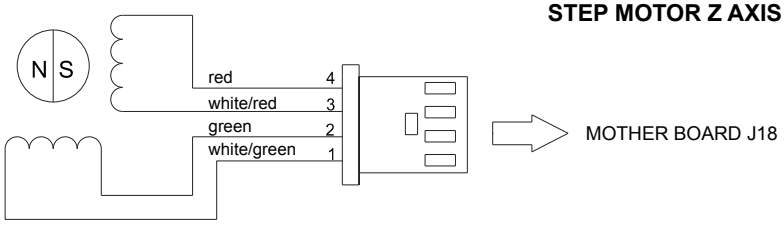

X AXIS SENSOR

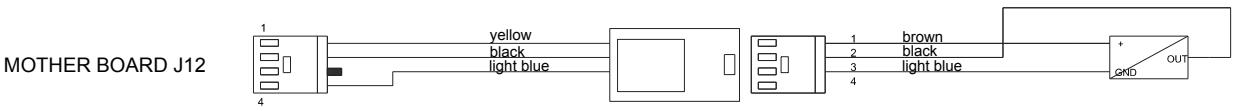

Y AXIS SENSOR

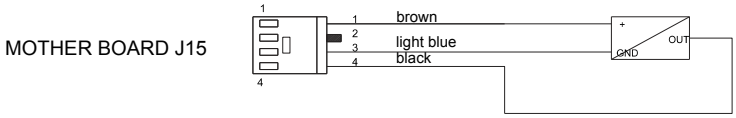

Z AXIS SENSOR

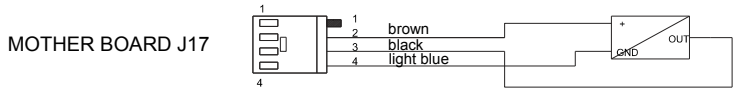

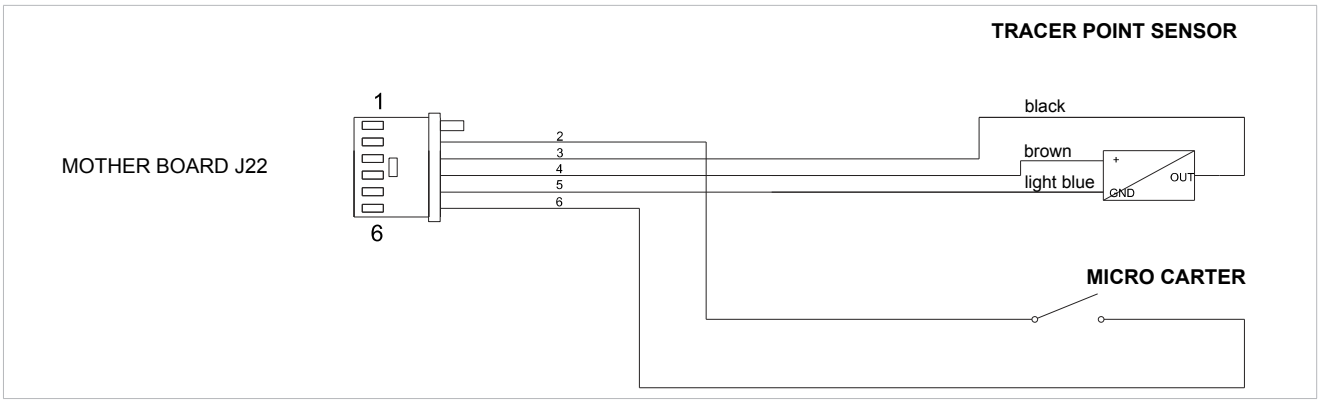

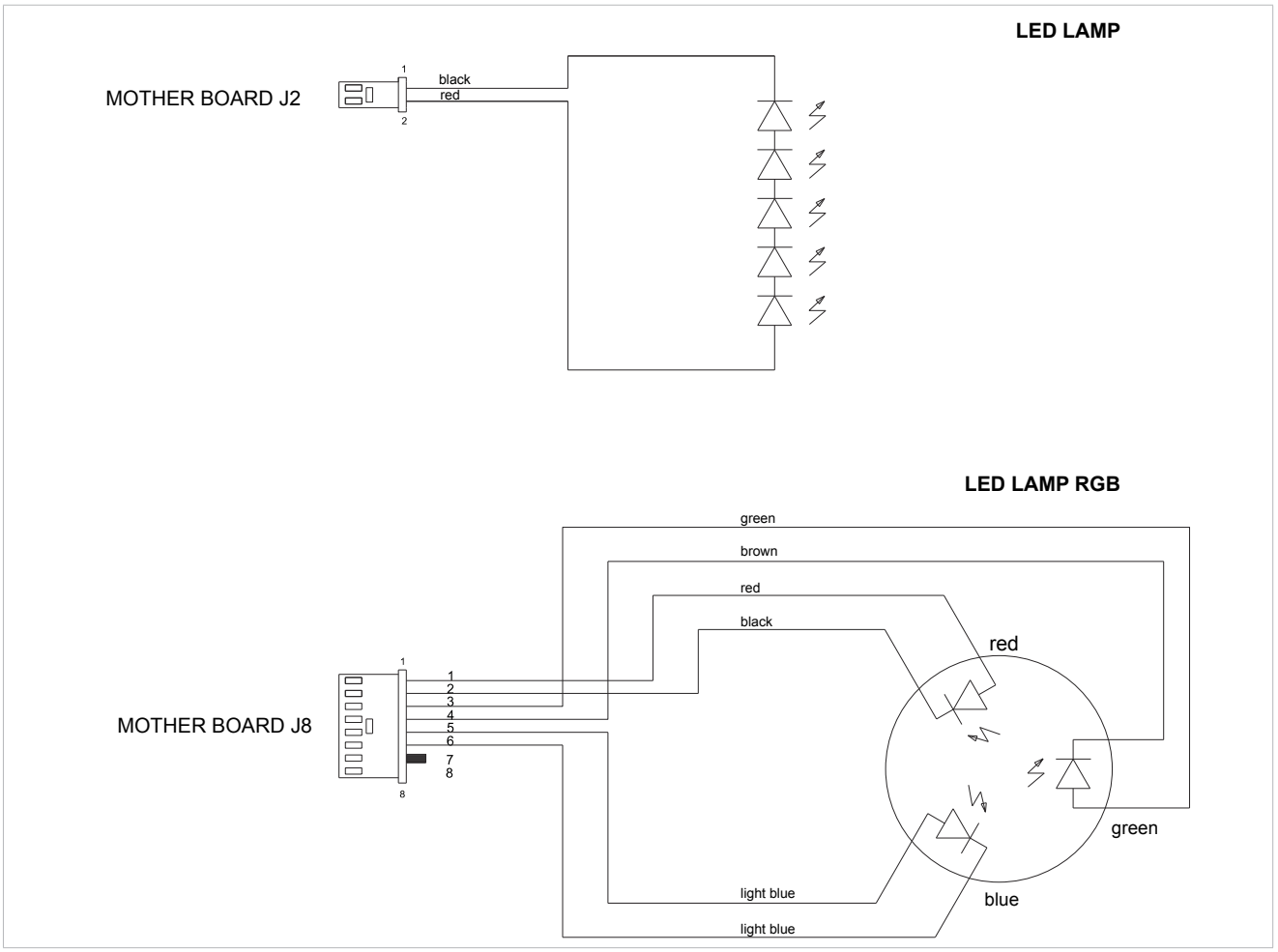

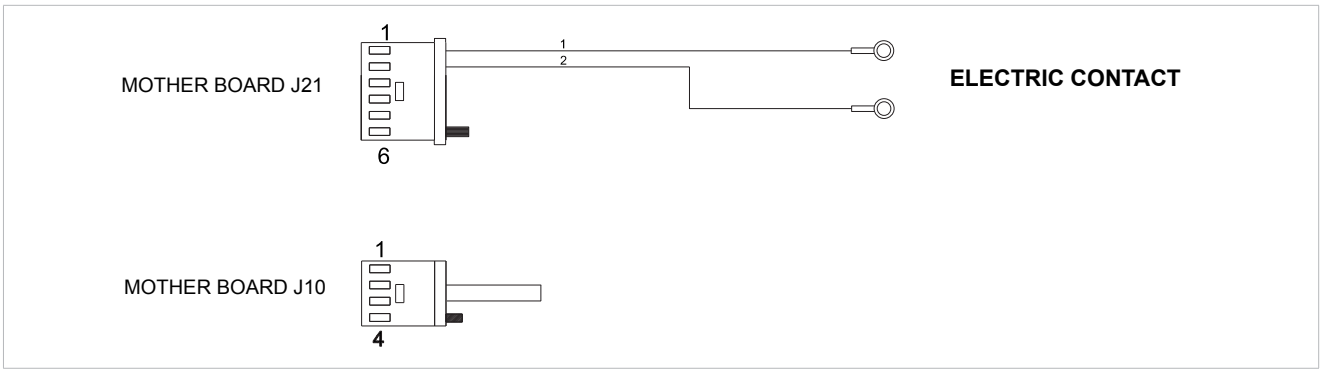

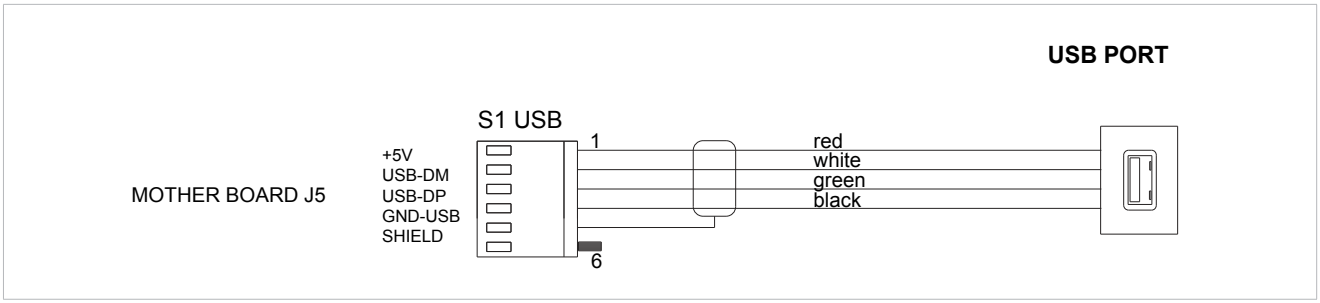

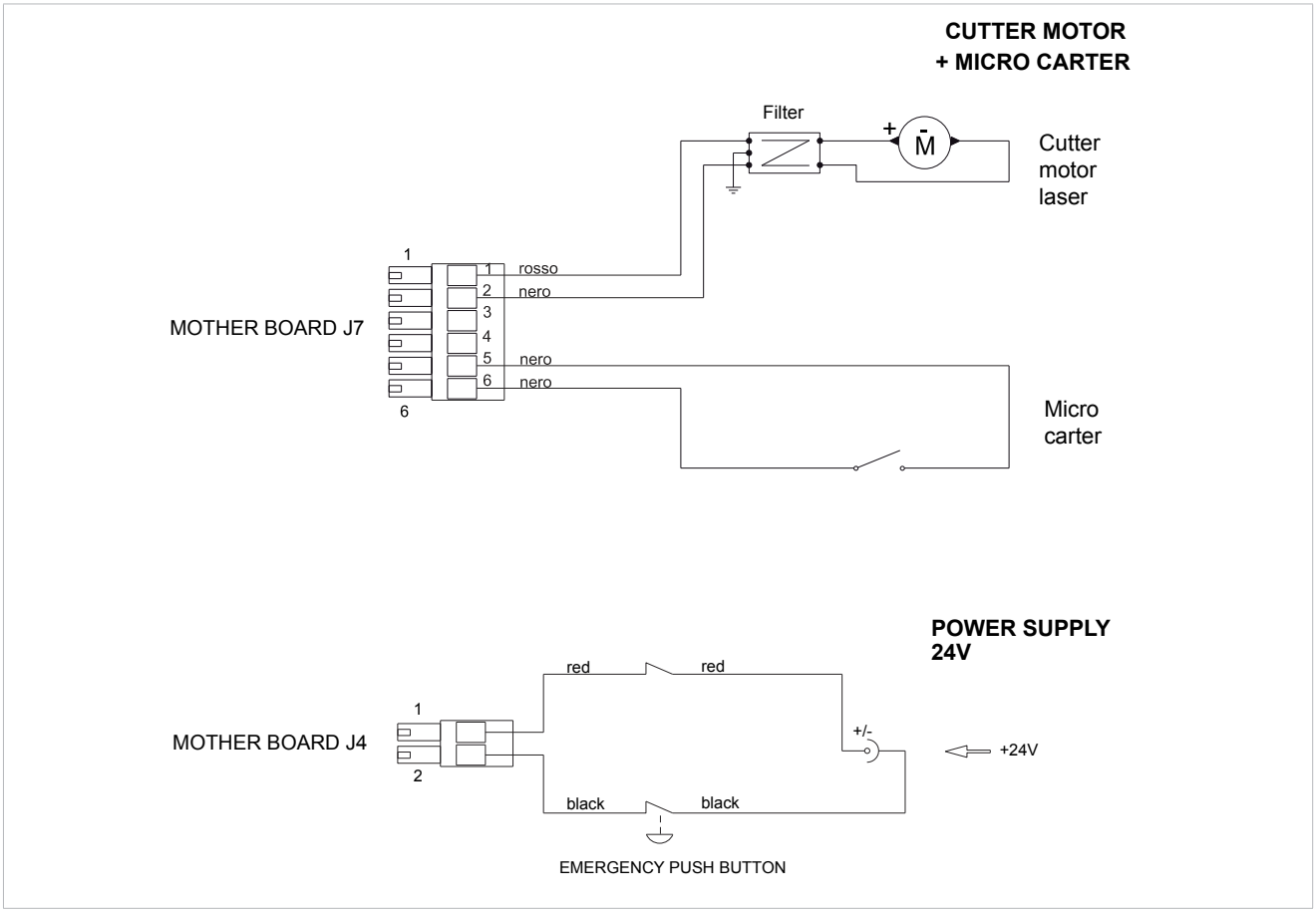

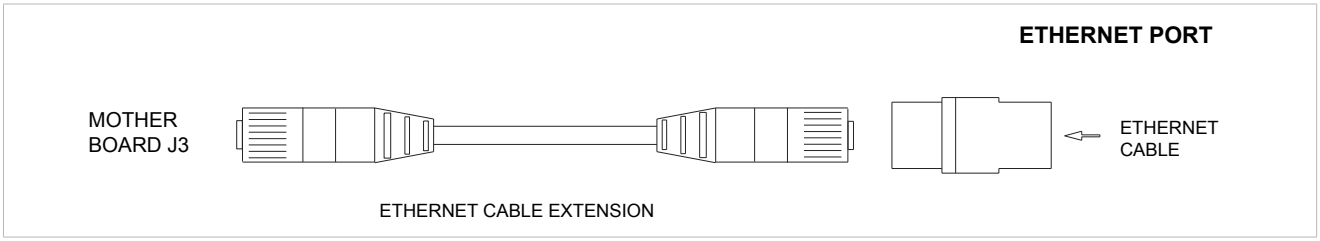

	EN	IT	DE	FR	ES	PT	NL
J2	Led lamp	lampada led	Led Lampe	Lampe Led	Lampara Led	Lâmpada Led	Led lamp
J3	Ethernet port	Porta ethernet	Ethernet-Anschluss	Port Ethernet	Puerto ethernet	Porta ethernet	Ethernetpoort
J4	Power feeder +24V	Alimentatore +24V	Speisegerat +24V	Alimentateur +24V	Alimentador +24V	Alimentador +24V	Voedingseenheid +24V
J5	USB port	Porta USB	USB-Anschluss	Port USB	Puerto USB	Porta USB	USB-poort
J6	Antenna	Antenna	Antenne	Antenne	Antena	Antena	Antenne
J7	Cutter motor + micro carter	Motore fresa + micro carter	Motor-Fräser + Mikro-Carter	Moteur fraise + micro carter	Motor fresa + micro carter	Motor fresa + micro carter	Freesmotor + cover micro
J8	Led lamp RGB	Lampada Led RGB	Led Lampe RGB	Lampe Led RGB	Lámpara Led RGB	Lâmpada Led RGB	Led lamp RGB
J9	not used	non usato	nicht verwendet	non utilisé	no utilizado	não utilizado	niet gebruikt
J10	not used	non usato	nicht verwendet	non utilisé	no utilizado	não utilizado	niet gebruikt
J12	X axis sensor	Sensore asse X	Fuhler X-Achse	Senseur axe X	Detector eje X	Sensor eixo X	X-as sensor
J13	X axis motor	Motore asse X	Motor X-Achse	Moteur axe X	Motor eje X	Motor eixo X	X-as motor
J14	Y axis motor	Motore asse Y	Motor Y-Achse	Moteur axe Y	Motor eje Y	Motor eixo Y	Y-as motor
J15	Y axis sensor	Sensore asse Y	Fuhler Y-Achse	Senseur axe Y	Detector eje Y	Sensor eixo Y	Y-as sensor
J16	not used	non usato	nicht verwendet	non utilisé	no utilizado	não utilizado	niet gebruikt
J17	Z axis sensor	Sensore asse Z	Fuhler Z-Achse	Senseur axe Z	Detector eje Z	Sensor eixo Z	Z-as sensor
J18	Z axis motor	Motore asse Z	Motor Z-Achse	Moteur axe Z	Motor eje Z	Motor eixo Z	Z-as motor
J19	not used	non usato	nicht verwendet	non utilisé	no utilizado	não utilizado	niet gebruikt
J20	not used	non usato	nicht verwendet	non utilisé	no utilizado	não utilizado	niet gebruikt
J21	Electric contact	Contatto elettrico	Elektrische Kontakt	Contact électrique	Contacto eléctrico	Contato elétrico	Elektrisch contact
J22	Micro cover + tracer point sensor	Micro carter + sensore tastatore	Mikro Carter + Taster Fühler	Micro carter + senseur palpador	Micro carter + sensor palpador	Micro carter + sensor palpador	Cover micro + sensor tracer punt
J23	not used	non usato	nicht verwendet	non utilisé	no utilizado	não utilizado	niet gebruikt

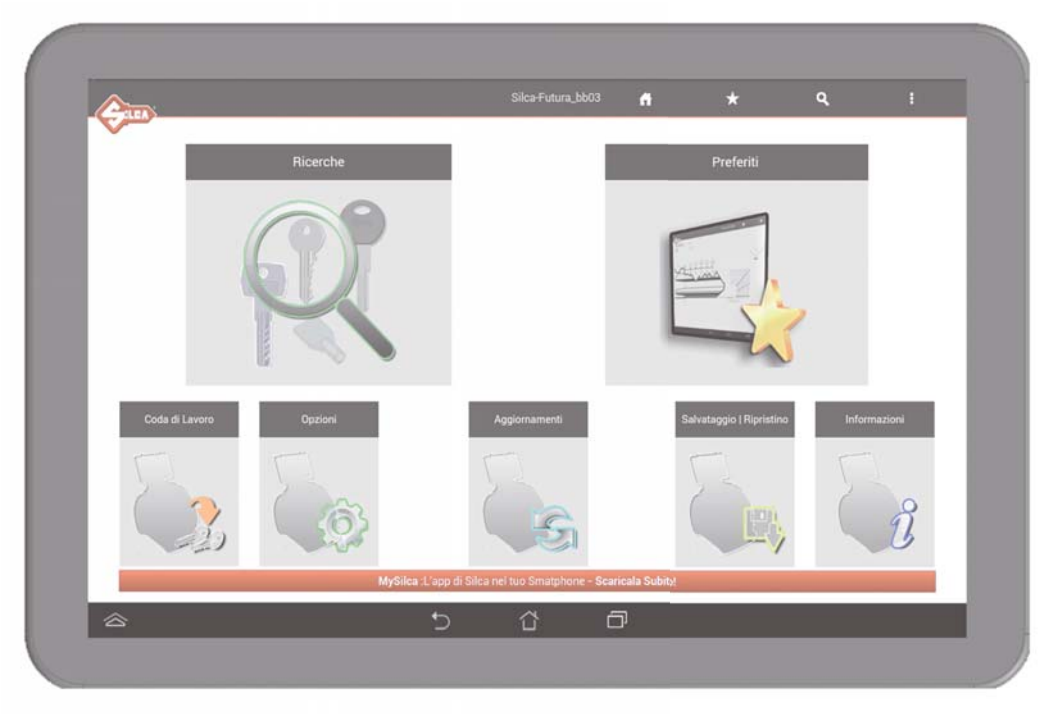

SOFTWARE

OPERATING GUIDE

INDEX

- *PROGRAM START* *3*
- *CHOICE OF KEYBOARD* *4*
- *CHANGE PROGRAM LANGUAGE* *4*
- *MEASURING UNITS* *4*
- *DROP-DOWN MENU* *5*

1 SEARCHES 6
1.1 VEHICLE keys 6
1.2 DIMPLE / TRACK keys 6
1.3 FULL KEY SEARCHING 6
1.4 SEARCH Parameters 7
1.5 DATA CARD/SERIE info 8
1.6 Using a CUTTING DATA CARD 10
1.7 Cutting DIMPLE/TRACK/TUBULAR keys and CUTTING SPEED 15
2 FAVORITE'S 16
3 QUEUE OF JOBS 17
4 OPTIONS 18
4.1 INFO 18
4.2 CALIBRATION 19
4.2.1 DIMPLE/TRACK keys clamp calibration 19
4.2.2 MOBILE TRACER 01T calibration 21
4.2.3 DIMPLE/TRACK keys Adapters calibration 21
4.3 SETTINGS 22
4.3.1 Zero-point Calibration (DIMPLE/TRACK key) 22
4.3.2 Options 24
4.3.2.a General 24
4.3.2.b Preferences DIMPLE/TRACK key 26
4.3.3 Network setting 27
4.3.3.a ACCESS POINT Mode 28
4.3.3.b LOCAL NETWORK Mode 30
4.4 MACHINE MAINTENANCE 33
5 MACHINE UPDATE and REGISTRATION 36
5.1 MACHINE REGISTRATION 36
5.2 MACHINE SOFTWARE UPDATE 40
5.2.1 Update in LOCAL NETWORK mode (Fig. 1 - Fig. 2) 41
5.2.2 Update with SILCA REMOTE SERVICE Program (Fig. 3) 42
5.2.3 Update from TABLET (Fig. 4) 43
5.3 APP UPDATE (Silca.apk e SilcaKeyboard.apk) 45
6 BACKUP / RECOVERY 48
7 USER SERIES 49
8 CHANGING TABLETS 53
9 FUTURA PROCEDURE TO CLEAR CACHE 56

- ***PROGRAM START***

To start the program hit the icon 

on the tablet screen.

If the program does not start check the network settings (see Ch.4.3.3).

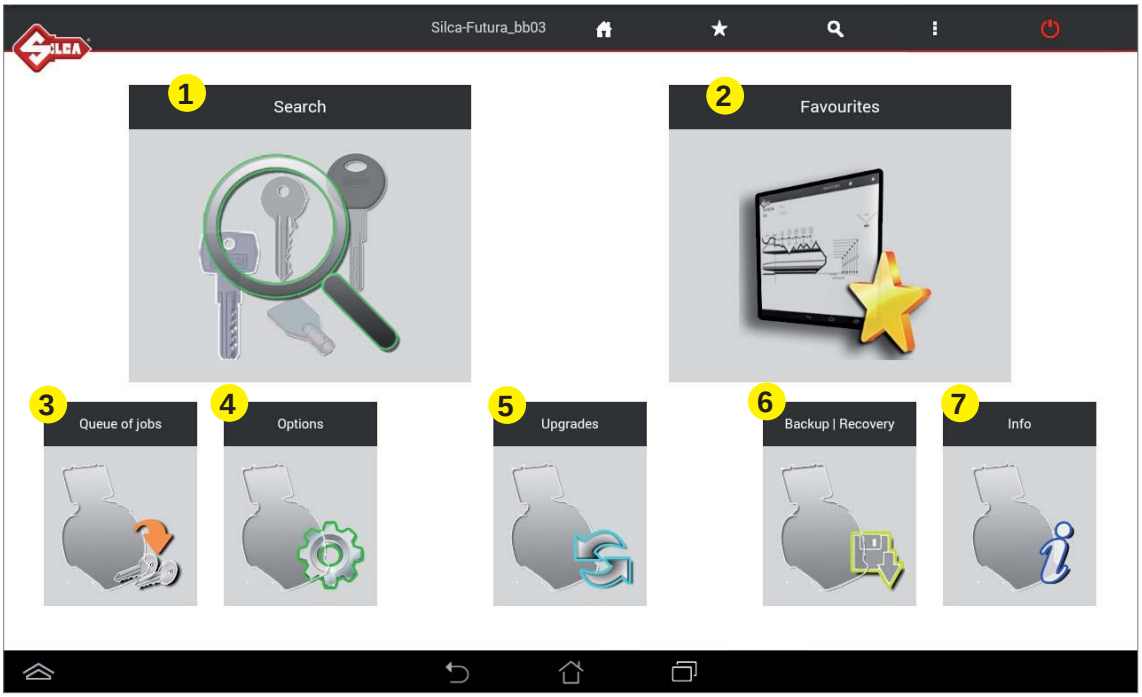

1- Search

Menu used to select a category of Series Searches.

2 - Favourites

Menu used to access a series of searches previously set up as favourites.

3 - Queue of jobs

Menu used to run the job queue previously created from the search menu.

4 - Options

Menu used to set up the machine.

5 - Upgrades

Menu used to update machine software.

6 - Backup | Recovery

Menu used to save machine data and restore them when necessary.

7 - Info

Menu showing machine details.

Silca-Futura_bbe3	**Machine ID:** shows the name of the Futura machine.
	Initial menu: tap the symbol to go back to the initial menu.
	Favourites: tap the symbol to view the data cards/series saved in the favorites menu.
	Search menu: tap the symbol for direct access to the “Search” menu.
	Information: tap the symbol to view information about the Futura machine
	Turn off machine: tap the symbol to turn off the Futura machine without affecting the software; wait until the green light goes out and then turn off the machine with the ON/Emergency push button.

• *CHOICE OF KEYBOARD*

When the FUTURA program is started you are required to choose the type of keyboard you will use for entering data.
SILCA Keyboard: smaller keyboard specially designed for the Futura program.
Android (AOSP) keyboard: standard Android tablet keyboard.

If you have chosen the Silca keyboard you can go back to Android by hitting the key on the Silca keyboard.

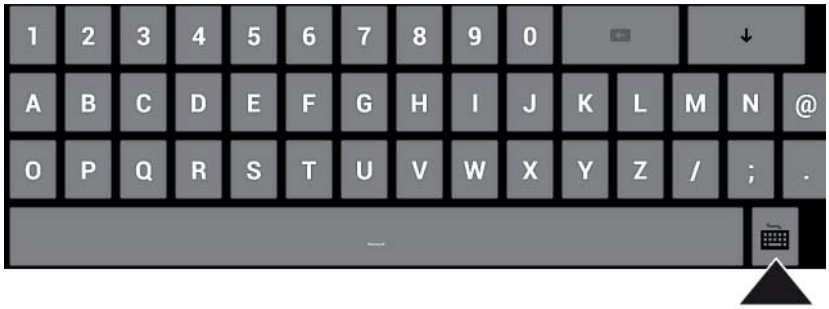

• *CHANGE PROGRAM LANGUAGE*

The default program language is English. To change language go to the **Options** menu (Ch.4), select **Settings -> Options -> General -> Language** and choose the language you require.

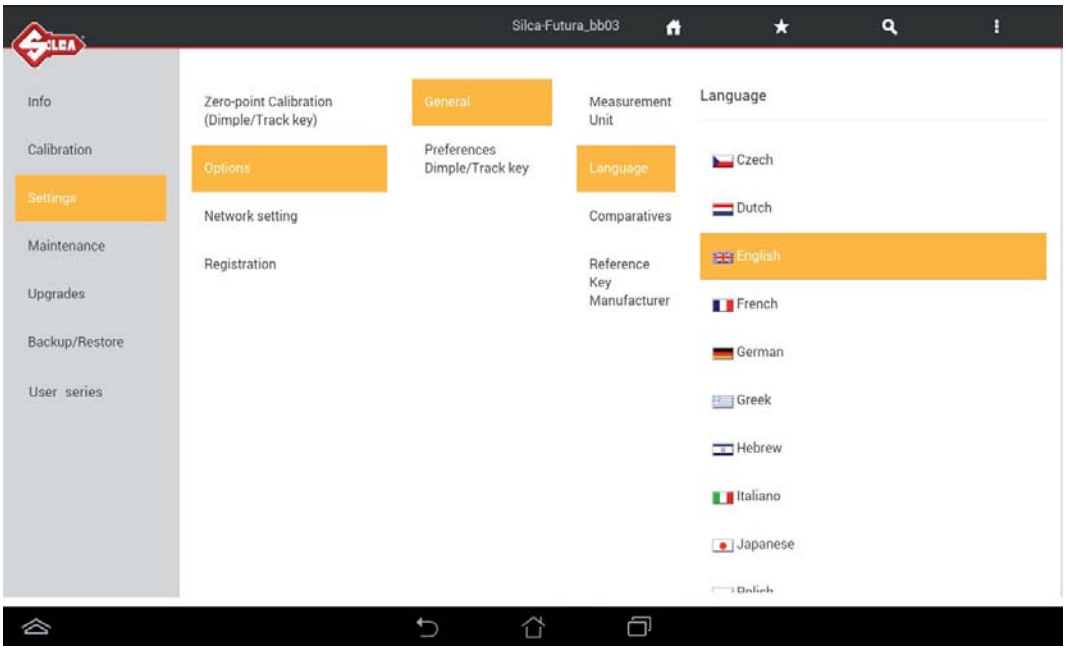

• *MEASURING UNITS*

All the values given in the program for the technical measurements of keys and clamps are expressed in hundredths of a millimetre (default) or thousandths of an inch, according to the measuring unit chosen from the “Options” menu.

- ***DROP-DOWN MENU***

To view this menu on the Tablet scroll from left to right to open the list:

Connect to: used to find the FUTURA machine, if there is a LAN connection or Wi-Fi Access Point.

Reload page: used to reload the page if it is not properly viewed/activated.

Restart Machine: used to restart the machine.

Machine IP address: used to enter the FUTURA IP address manually (default is192.168.0.1).

Reset Axes: used to clear the axes on the FUTURA machine.

Machine Status: used to see connection status between the machine and Tablet.

Change Keyboard: used to select and set the type of keyboard to be used (Silca or ASUS keyboard)

Machine Registration: used to register the FUTURA machine when the Tablet is connected to a Wi-Fi network with internet access.

Update FUTURA: used to download new updates for the machine when the Tablet is connected to a Wi-Fi network with internet access.

Recovery tools: this function is protected by a password and is for the exclusive use of Silca personnel.

In addition, the Silca App version installed on the Tablet is shown below.

1 SEARCHES

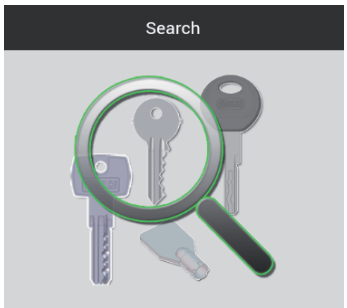

When the Searches menu is opened, the following window appears:

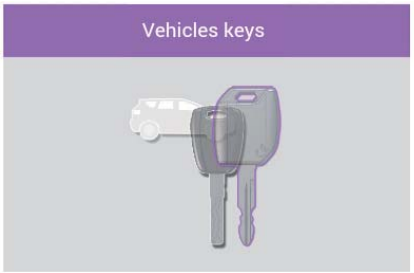

1.1 VEHICLE keys

This menu is used to restrict a search to the category of standard edge cut and track vehicle keys only (e.g.: HON66GP - HU66P - SIP22LP - TOY40P ...)

1.2 DIMPLE / TRACK keys

This menu is used to restrict a search to the dimple/track category of keys (e.g. AB48 - AB62 - AB84 - CS62 - IE15 ...).

1.3 FULL KEY SEARCHING

This menu is used to make extended searches not restricted to categories.

The SEARCH menu for VEHICLE keys differs from the others in that it has 4 extra search parameters:

Vehicle make: enter the name of the vehicle manufacturer.

Model: enter the name of the vehicle model.

Year from: enter the year the model first came out.

Year to: enter the year production of the model ceased, or leave the field empty.

See example of DIMPLE keys search flow.

When you enter the DIMPLE/TRACK keys category the following window appears for you to enter the search parameters.

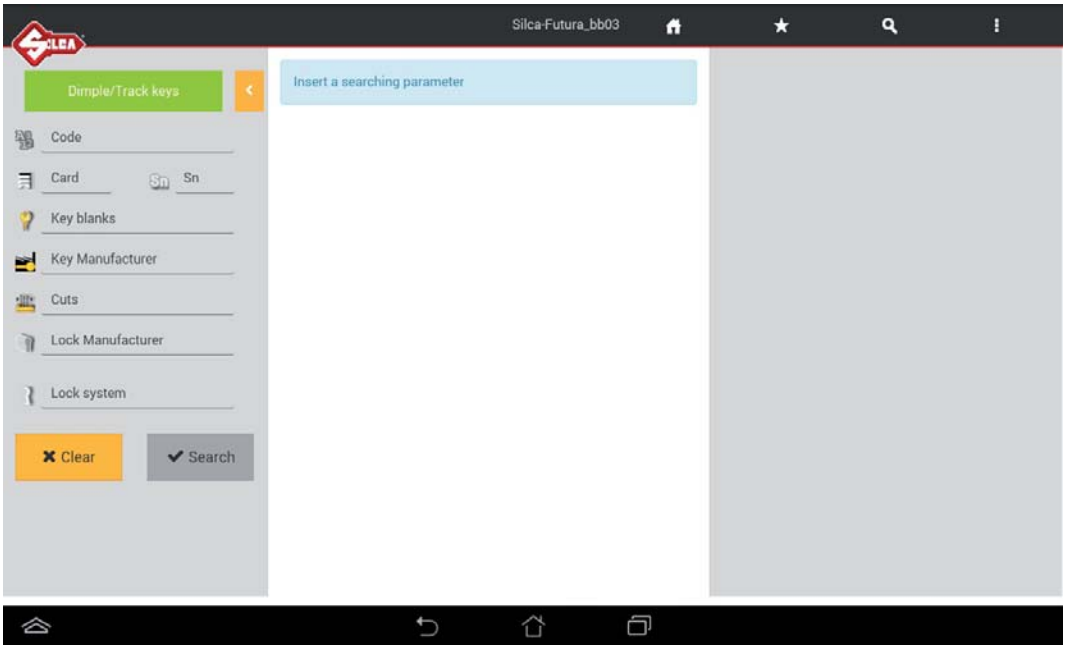

1.4 SEARCH Parameters

Code: enter the indirect key-cutting code.

Card / Sn: enter the card number or serial number assigned by Silca.

Key blanks: enter the Silca/Ilco key blank code or comparative.

Key manufacturer: enter name of key manufacturer.

Cuts: enter number of cuts for the key to be included in the search.

Lock Manufacturer: enter the brand of lock to be included in the search.

Lock system: enter the name of the lock system.

Press "**Clear"** to delete the entered fields.
After entering one or more parameters, tap the "**Search**" button to start the search. This operation will show the data relating to the lock systems found and information about the Silca/Ilco key blank, if applicable.
Hit › on the left-hand side of the page to re-open the Search Parameters window.

1.5 DATA CARD/SERIE info

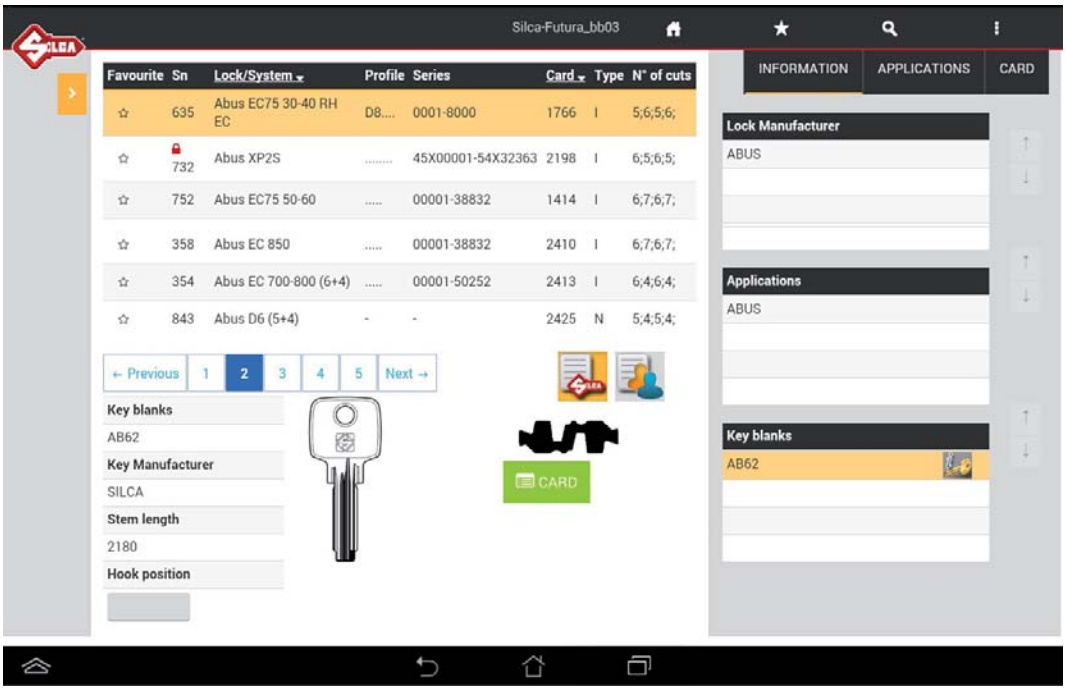

To access the cutting card select the relevant line and tap the "OPEN CUTTING CARD" button.

In the section of the window showingthe search results

Favourite	Sn	Lock/System	Profile	Series	Card	Type	N° of cuts

- Order searches by tapping the arrow next to the relative fields.
- Select a series from those shown, or search for it on the next pages: ← Previous 1 2 3 ... 7 Next →
- Select the "**Silca**" or "**User**" series:
  - "Silca" is the default icon for viewing Silca series.
  - tap "User" to view the existing user series (Ch.7) associated to the selected card.
- Hit the special field to enter the Hook position: it is automatically saved when the keyboard is turned off.

There are "3 folders" on the right of the screen:

INFORMATION: shows information about the lock make, applications and Silca/Ilco key blank. Info about a key can be viewed by tapping the field relating to the key blank.

APPLICATIONS: shows the applications for which this key blank is used: locks, cylinders, vehicle model,etc.

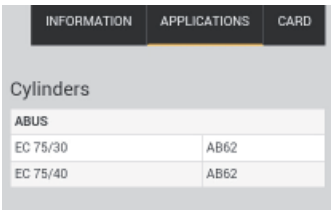

CARD: shows information relating to accessories needed for cutting keys with the FUTURA key-cutting machine.

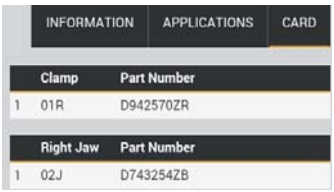

KEY BLANK

To gain access to additional information regarding the Silca key blank simply tap on the following icon 

- List of other Silca key blanks that can be used
- List of comparative key blanks
- List of Brand names linked to the Silca key blank.

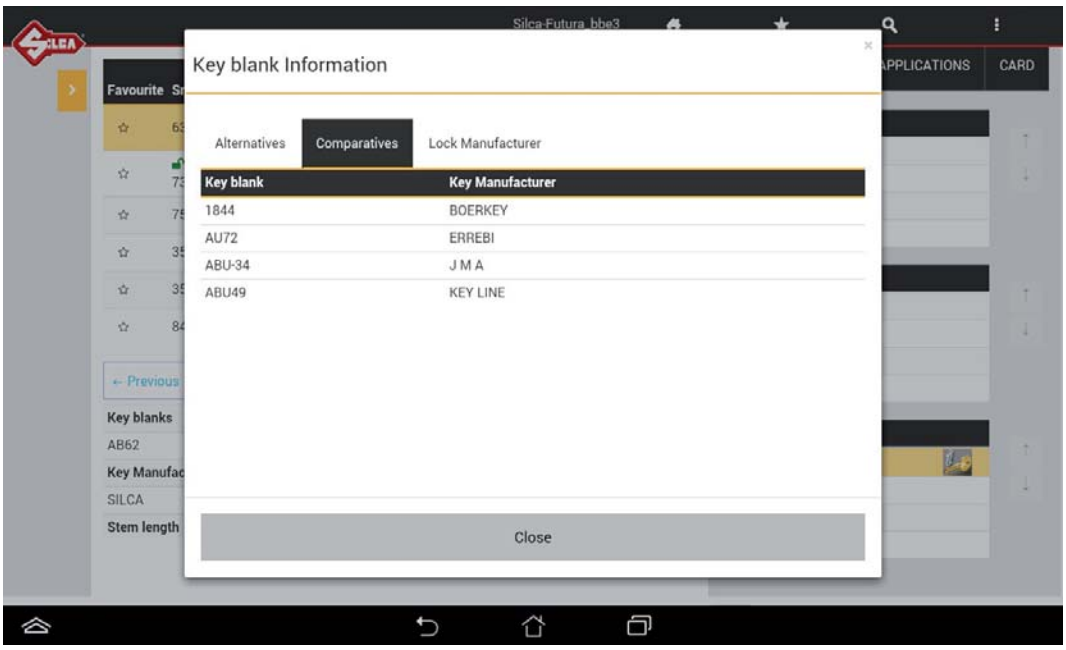

1.6 Using a CUTTING DATA CARD

Example: Data card for DIMPLE keys

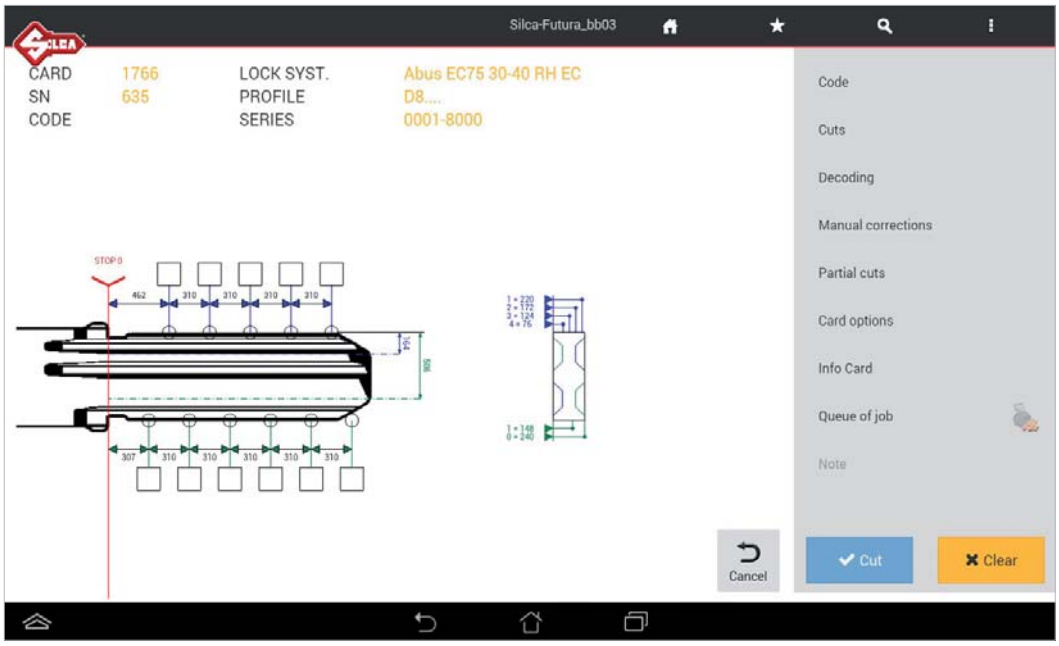

The screen shows all the technical details relating to the selected cutting card (e.g. **Card, SN, Profile, Series, Spaces, Depth**).
Tap the Cancel key to go back to the previous screen.

The list on the right contains the functions listed below:

- **CODE:** enter the indirect code for cutting the key.
- **CUTS:** this function is used to enter direct cuts.

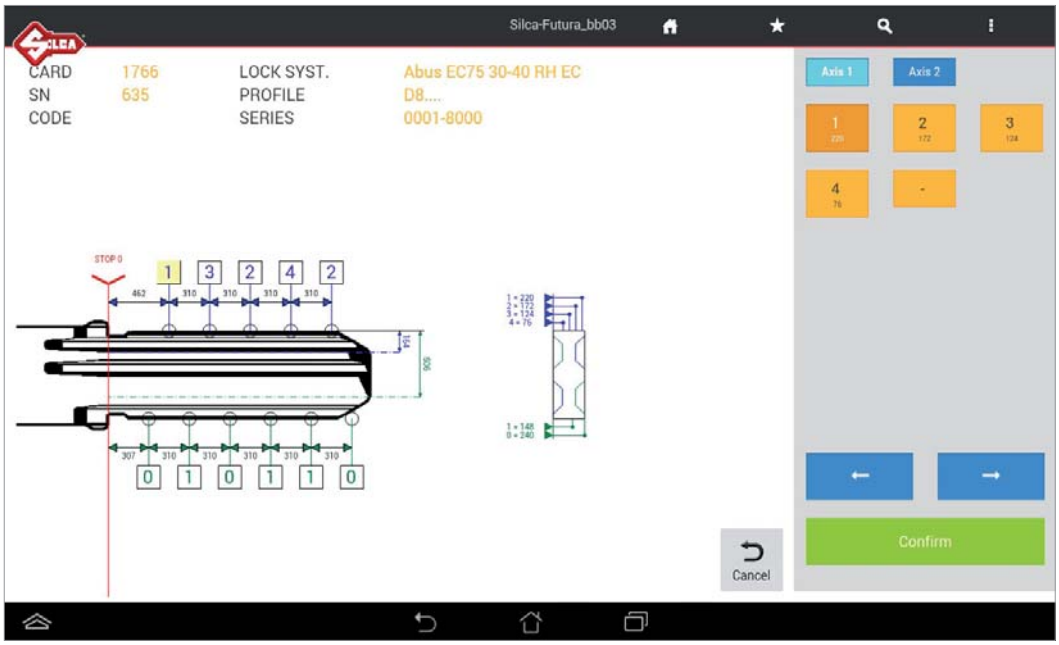

- **QUEUE OF JOBS:** if the cut is filled and correct you can save your job in “Queue of Jobs” by tapping the following icon  (the job can then be done afterwards).

Tap on “Queue of Jobs” to display the list of jobs available.

- **DECODING:** used to decode the cuts on the original key.

Hit “Decoding”: information appears regarding the position of the key in the clamp.
To continue hit START and perform the operations described on the screen.
At the end of the operation hit OK.

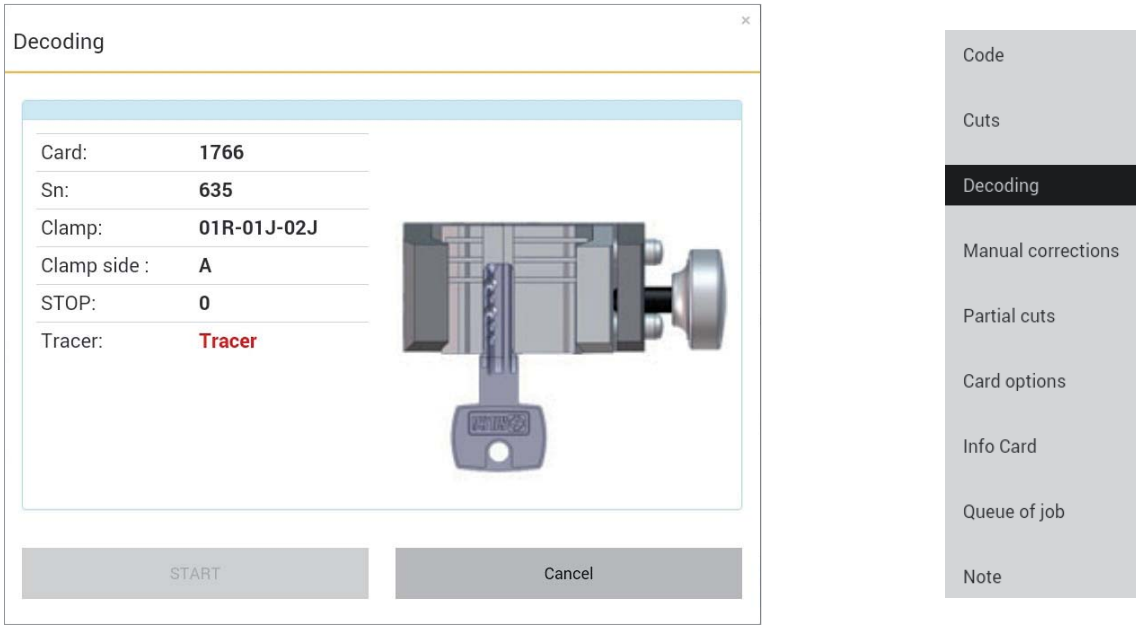

To view the decoded measurements and the measurements read on the key, hit “Decoded Values” on the bottom of the screen.

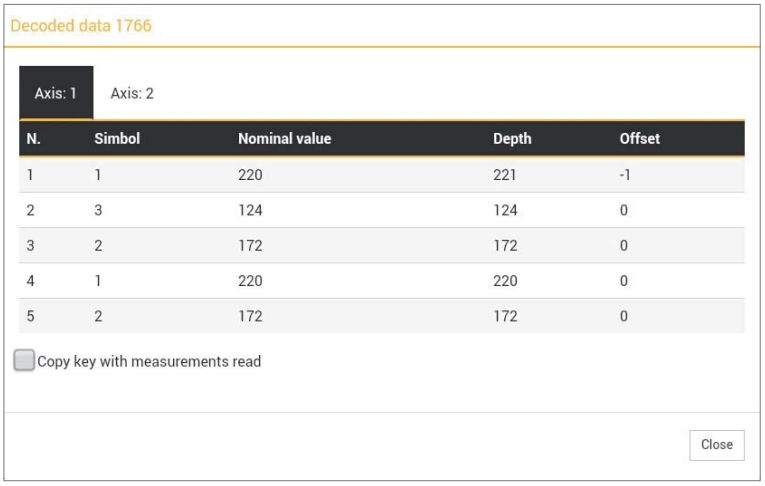

N.	Simbol	Nominal value	Depth	Offset
1	1	220	221	-1
2	3	124	124	0
3	2	172	172	0
4	1	220	220	0
5	2	172	172	0

Then hit “CUT” to cut the key using the combination provided by the previous operation.

Copy key with measurements read: after decoding a key the cuts can be verified and compared to the keys original cuts. If the cuts “Offset” values are significant, it’s possible to cut the key by using the measurements just read (not the keys original cuts nominal values that are in the card) by inserting a check “flag” in the appropriate box.

NOTE: when decoding keys, you must use the clamp designated by the software as well as the stop position designated in order to decode the key properly. Use of other clamp or stop positions will result in a misread key. Once decoded, should you receive the message “key blank not allowed” or “bad permutation”, the key may not have been positioned properly. As a result the software will not recognize the key blank or the depths read will not correspond with any of the codes in the code series database. If you are sure that the proper card and key blank were used, reposition your key and try again.

- **MANUAL CORRECTIONS:** to enter manual adjustments in the relative fields for X axis and Y axis, activate the “Use corrections” flag”, hit “Save” and then “Close”.

Adjustments: from -30 to +30 hundredths of mm (+/- 118 thousandths of an inch)

An icon Manual corrections ⚠ indicates when the manual adjustment is active.

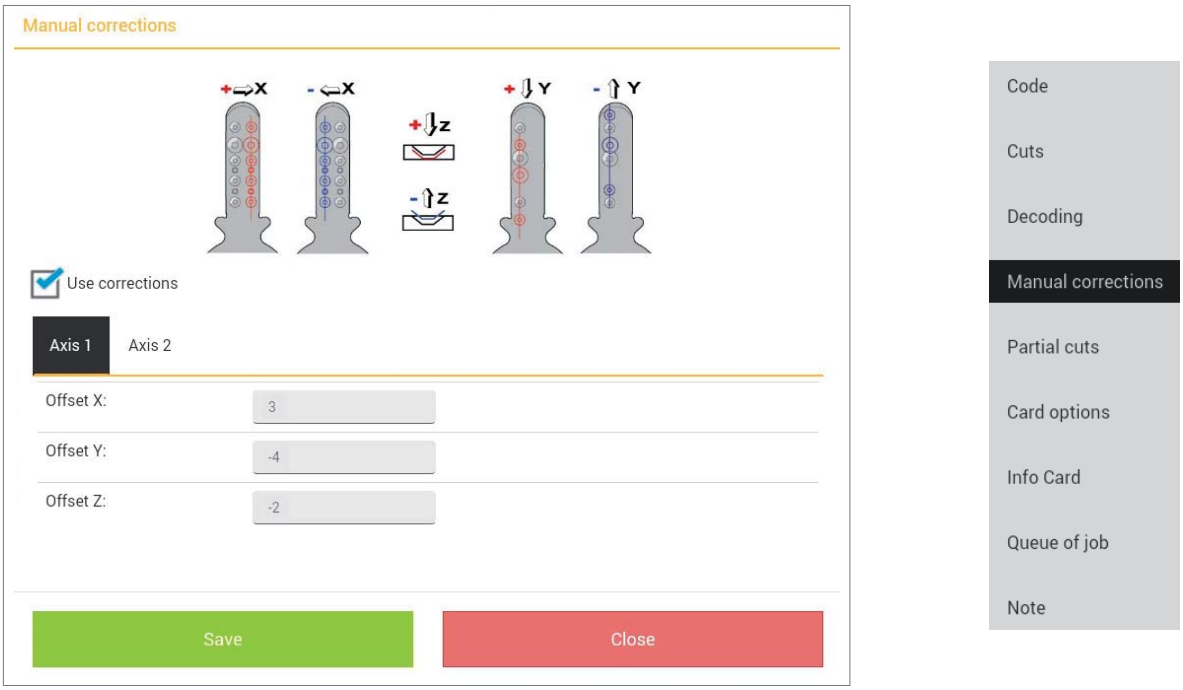

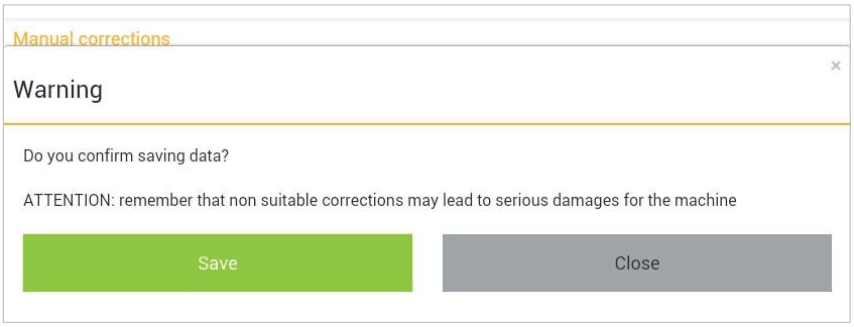

Confirm with “Save”.

- **PARTIAL CUTS:** used to make a search for correspondence with the code table (if applicable): enter the known cuts and hit “Search”.

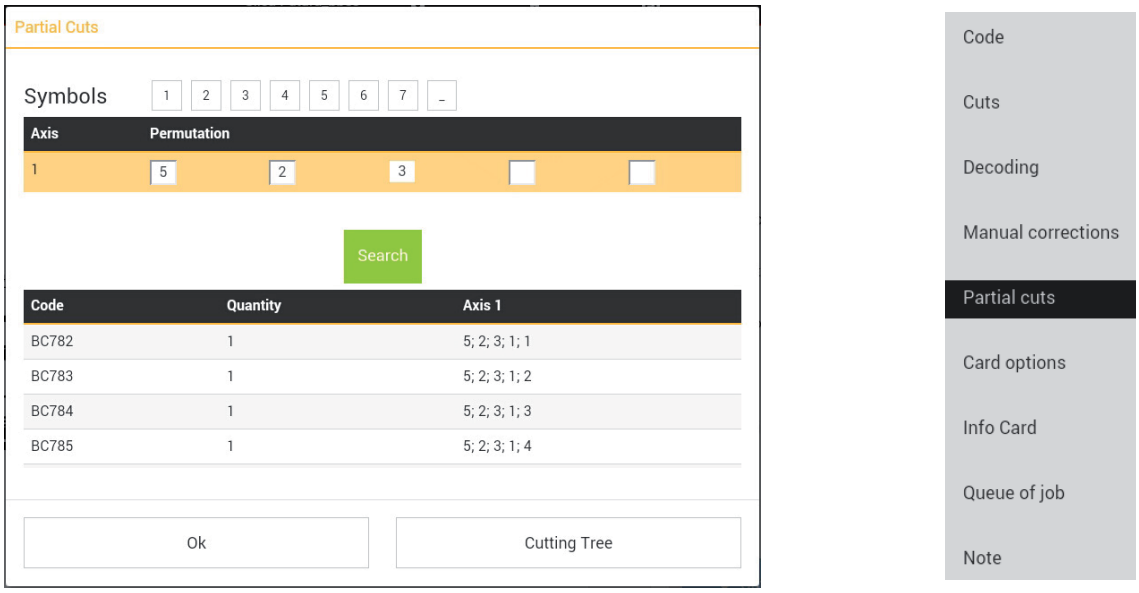

Cutting tree: function accessible only from “Partial cuts” and enabled only for Data cards/Series with code tables available. Tap the “Cutting Tree” key to continue.

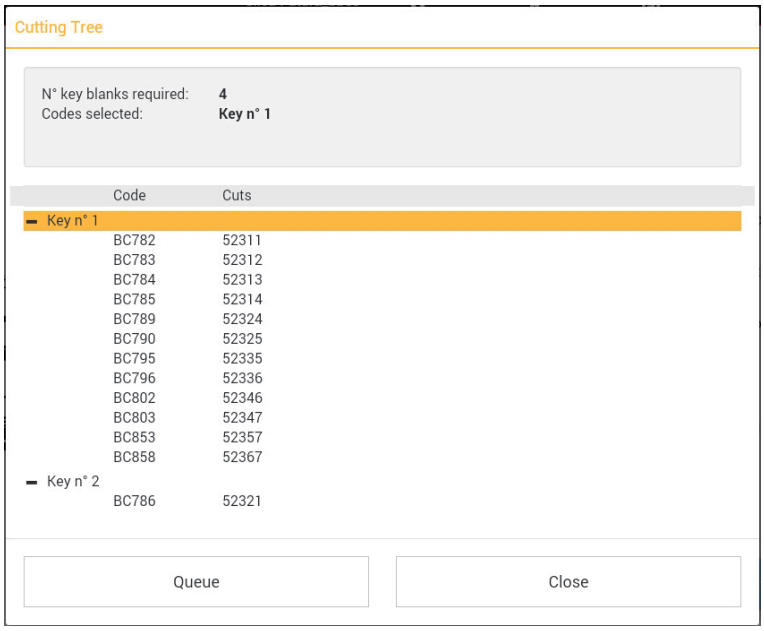

- The list of keys shown in the cutting tree coincides with the list of keys shown in the “Partial cuts” window; however, here the keys are listed according to Groups, Code and Cuts in order to reduce to a minimum the number of key blanks to be used.
- The box at the top of the screen shows the maximum number of key blanks to be used for all the possible cut combinations listed.
- Each Group needs a new key blank to cover all the cut combinations it lists (work down from top). Select the group and/or single code and tap the QUEUE key to place them in the job queue.
- Tap Close, OK, and then Queue of Job.
- The jobs must be carried out in progressive order, starting from the key with the shallowest cuts to those with deeper cuts.

- **CARD OPTIONS**

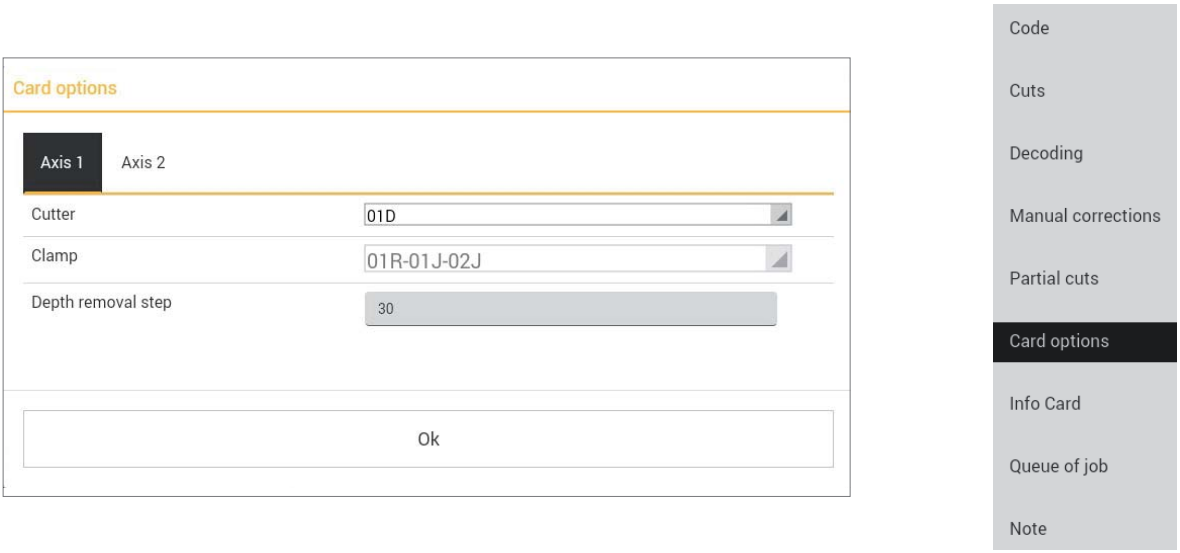

Depth removal step: this value indicates the amount of material trimmed by the cutter at each passage (example expressed in hundredths of a millimeter).

- **INFO CARD:** views information about the clamp to be used, the jaws, the key stop, the tracer, the cutter and key blank.

Hit the relevant icons to see images and part code.

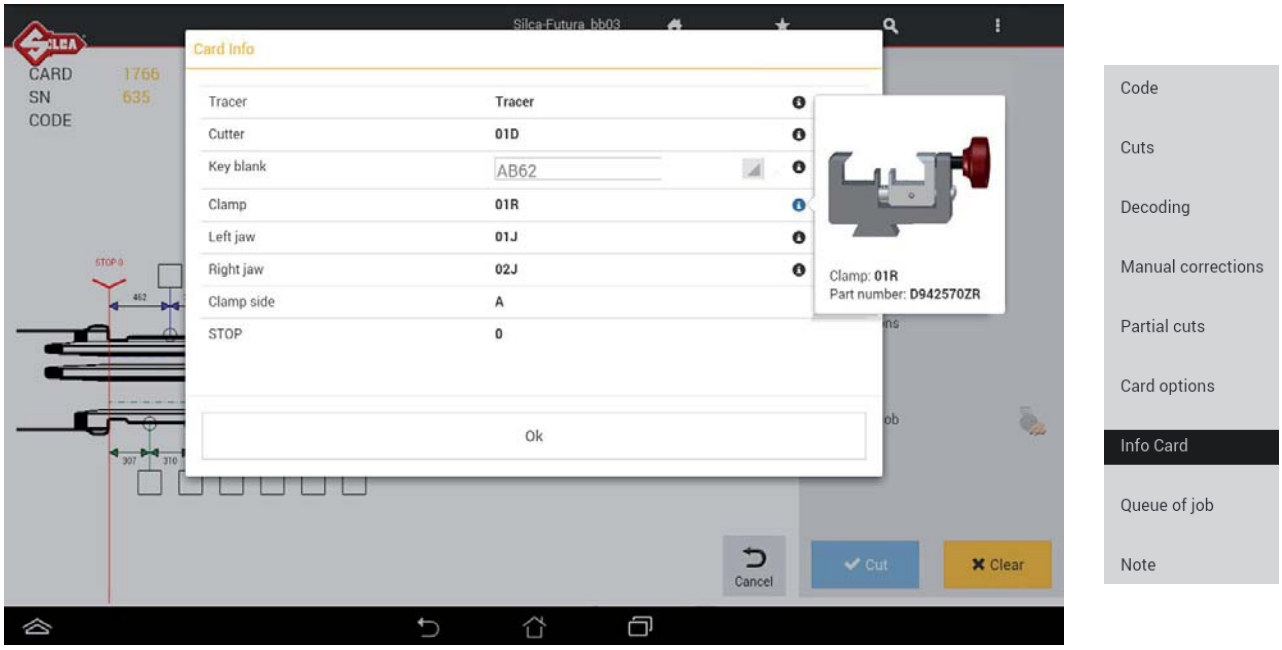

- **NOTE:** when highlighted views data card notes, i.e. further specific information relating to the position of the key or an accessory, etc.

1.7 Cutting DIMPLE/TRACK/TUBULAR keys and CUTTING SPEED

To make a cut on the key, hit CUT 

: information is shown about the position of the key in the clamp. Enter the number of pieces required and press START to begin.

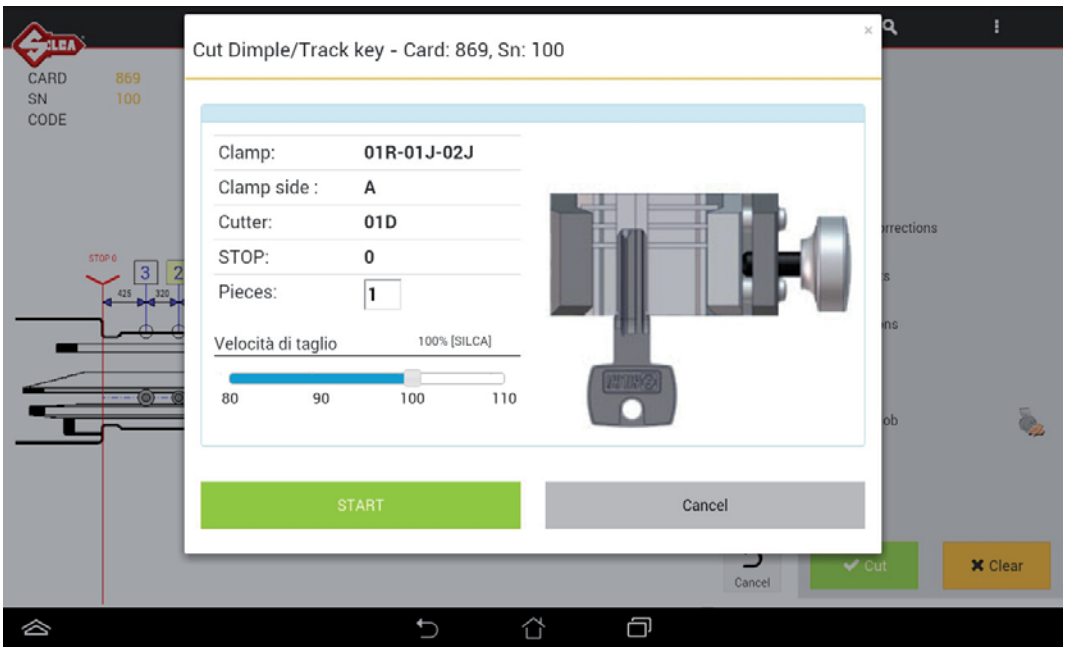

The following can be set:

1 - Pieces: indicates how many keys you wish to cut.

2 - Cutting speed change (relates to carriage advancement).

NOTE: the default value set by Silca is 100.

To change the Silca settings, tap the required value:

- With a value of 110 (the carriages will advance at a speed 10% higher than the default setting).
- With a value of 90 or 80 (the carriages will advance 10% or 20% more slowly than the default setting).

Press START to begin the procedure.

2 FAVORITE'S

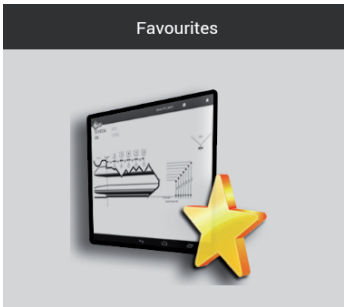

The FAVORITES menu contains the data cards that have been selected in the Search menu (Standard keys, Vehicle keys, Dimple/Track keys). Saving data cards to the favorites menu will eliminate the time spent searching for frequently used cards.

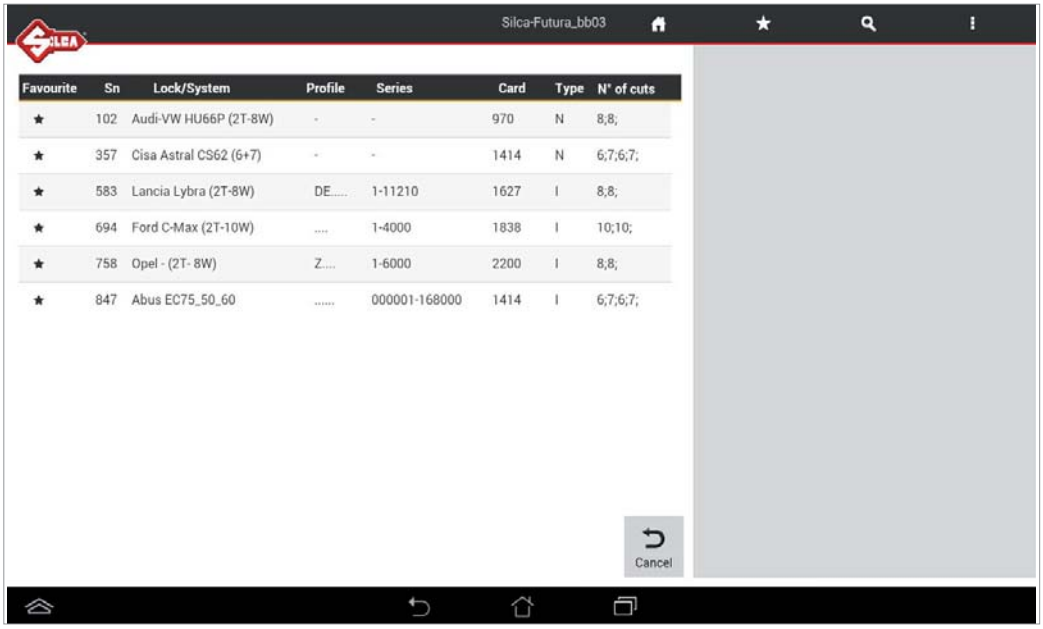

To select data cards to be included in the Favorite's menu hit the star symbol in the first left-hand column of the Search menu; the symbol will be highlighted in black.

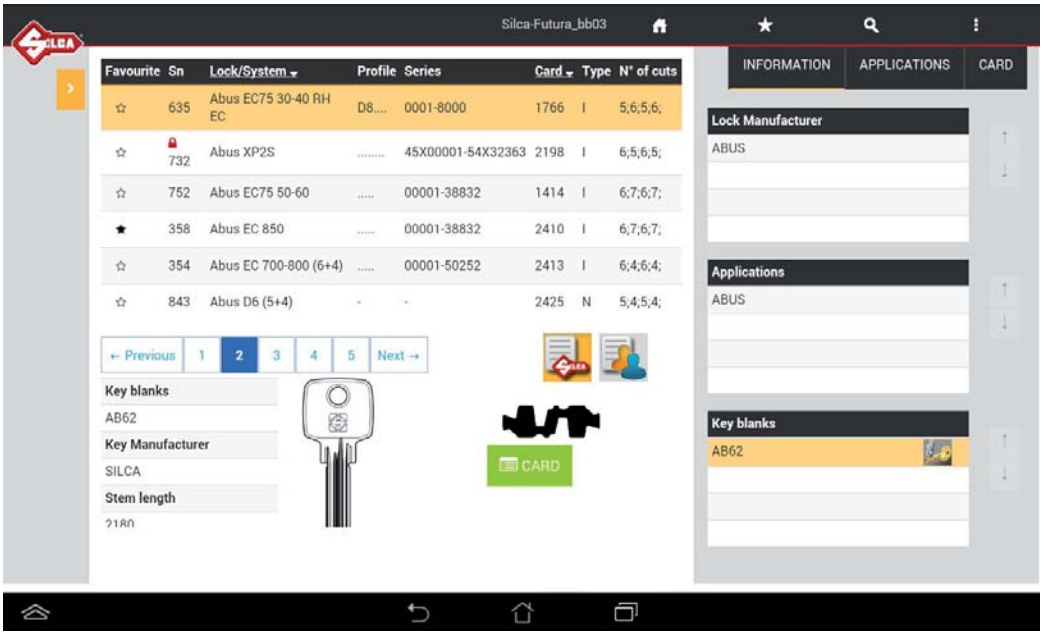

To remove a data card in the Favorite's menu, hit the relevant star symbol, which will go back to white.

3 QUEUE OF JOBS

The “Queue of Jobs” collects all the jobs (the keys) the user prefers to do later. See on page 10 how to move a job in this “Queue of Jobs”.

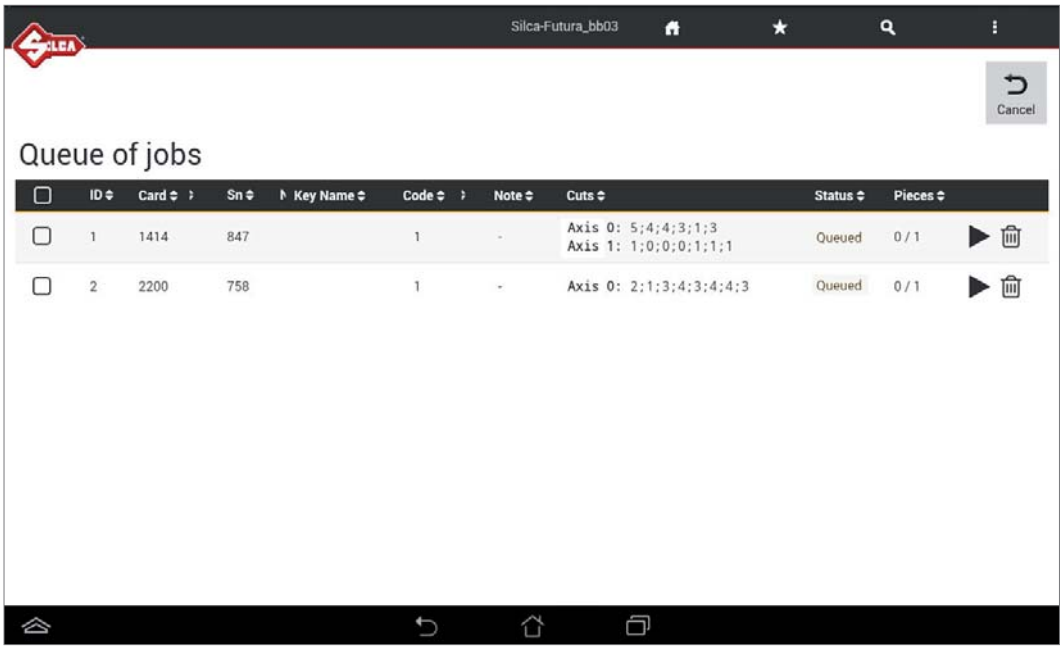

- **To cut the key**, select only one job at a time (by inserting a check “flag” in the appropriate box) then tap on the arrow symbol ▶ to gain access to the key cutting screen (see page 9).
- **To select/deselect** all the jobs saved in the Queue tap ■; the number of pieces can be edited for all jobs or all jobs can be deleted.
- **To delete a job** just tap on the “garbage bin” 🗑 or select one or more jobs, and then tap on “Delete Job”.
- **To modify the amount** of keys to cut, just select a job and then tap on “Modify Pieces” then type in the amount you intend to cut and tap on “Confirm”.

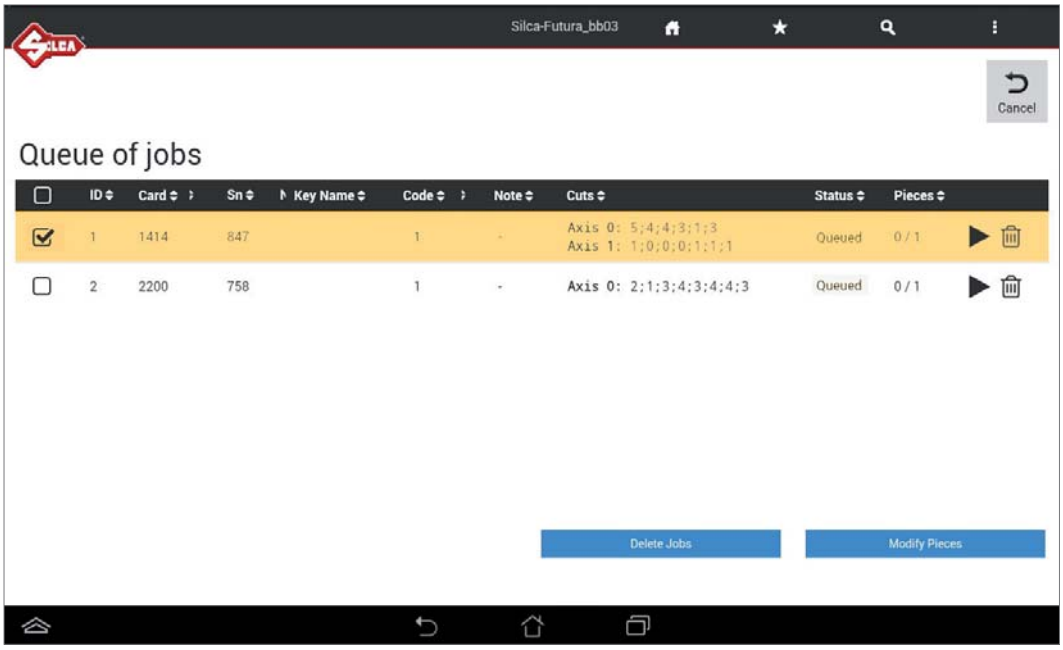

4 OPTIONS

Options contains the following menus:

- **Info**
- **Calibration**
- **Settings**
- **Machine maintenance**
- **Upgrades**
- **Backup/Restore**
- **User series**

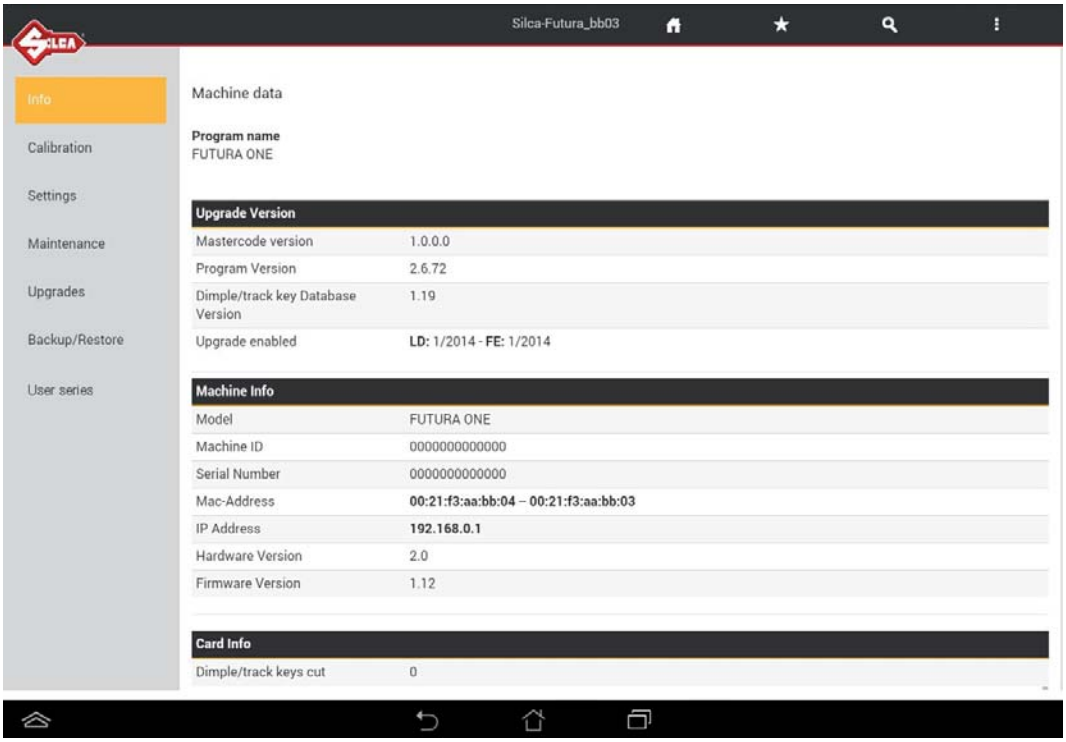

4.1 INFO

This window shows the main data for the FUTURA machine (e.g. SW update version, serial number, number of keys cut, etc.).

4.2 CALIBRATION

Calibration includes:

- **Clamps Dimple/Track keys**
- **Mobile Tracer**
- **Dimple/Track key Adapter**

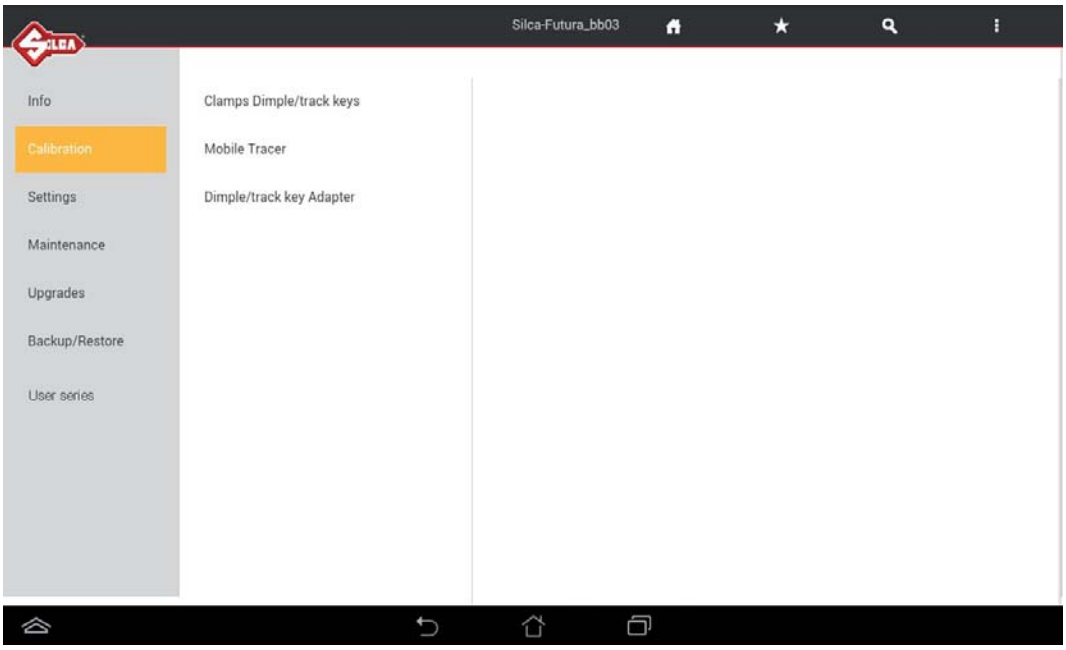

4.2.1 DIMPLE/TRACK keys clamp calibration

This menu contains a list of standard clamps and options for cutting these types of keys. Select the required clamp and hit START to begin calibration.
Use the 02T tracer for calibrating the clamps.

ATTENTION: to calibrate clamps with J… jaws make sure the jaws are closed completely before proceeding.

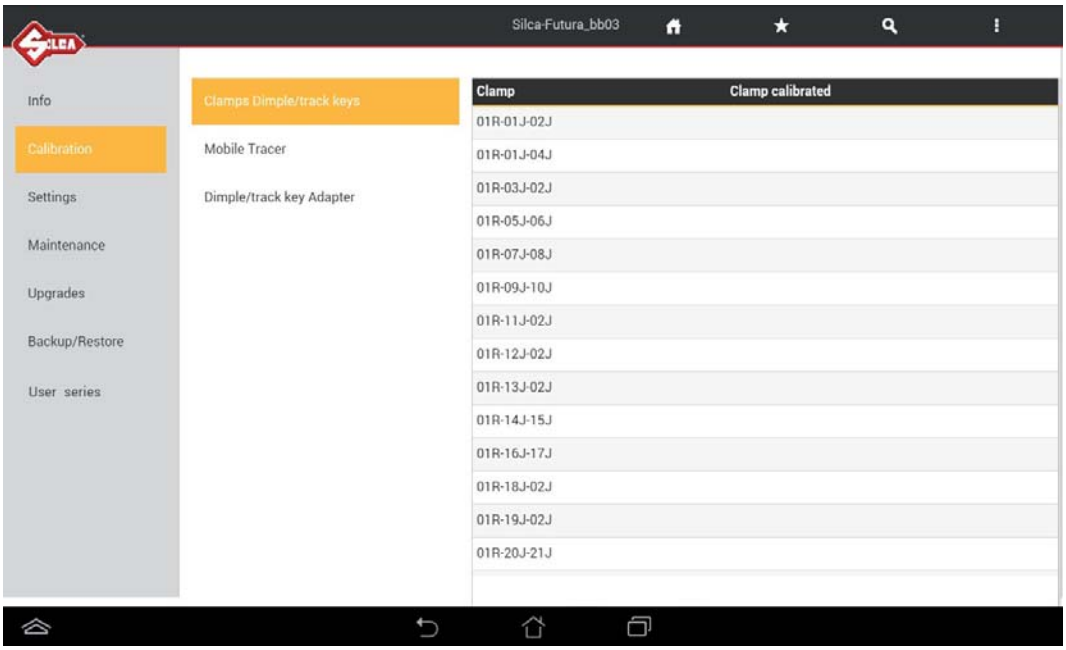

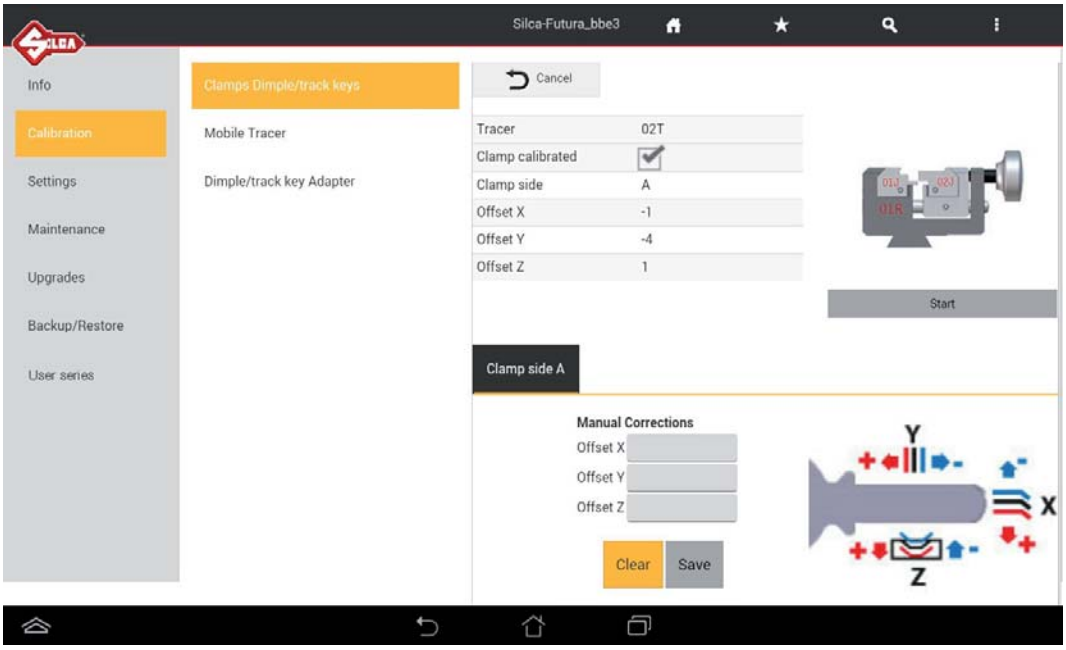

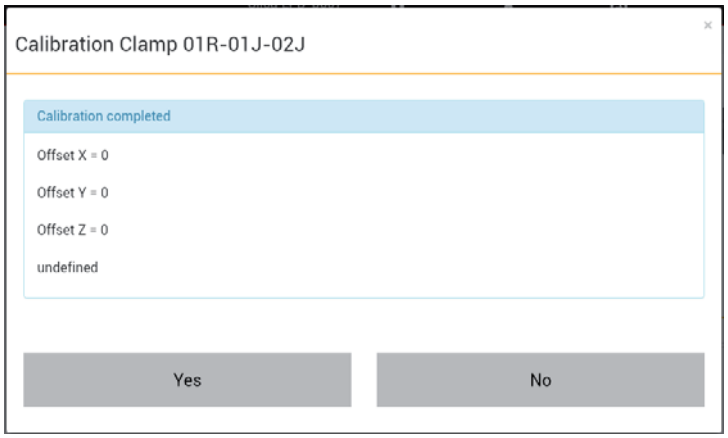

At the end of the operation you are required to save the data entered. Hit “Yes” to confirm.

MANUAL CORRECTIONS

Y, X and Z axis manual corrections can be applied if necessary.
Positive value of Y: takes cut closer to stop.
Negative value of Y: takes cut away from stop.
Positive value of X: moves cut to the right of the axis.
Negative value of X: moves cut to the left of the axis.
Positive value of Z: lowers the cut from the axis.
Negative value of Z: raises the cut from the axis.

Adjustments: from -30 to +30 hundredths of mm (+/- 118 thousandths of an inch)
Tap “Save” to confirm.

4.2.2 MOBILE TRACER 01T calibration

ATTENTION: when calibrating the 01T mobile tracer make sure the J1-J2 jaws are completely closed before proceeding.

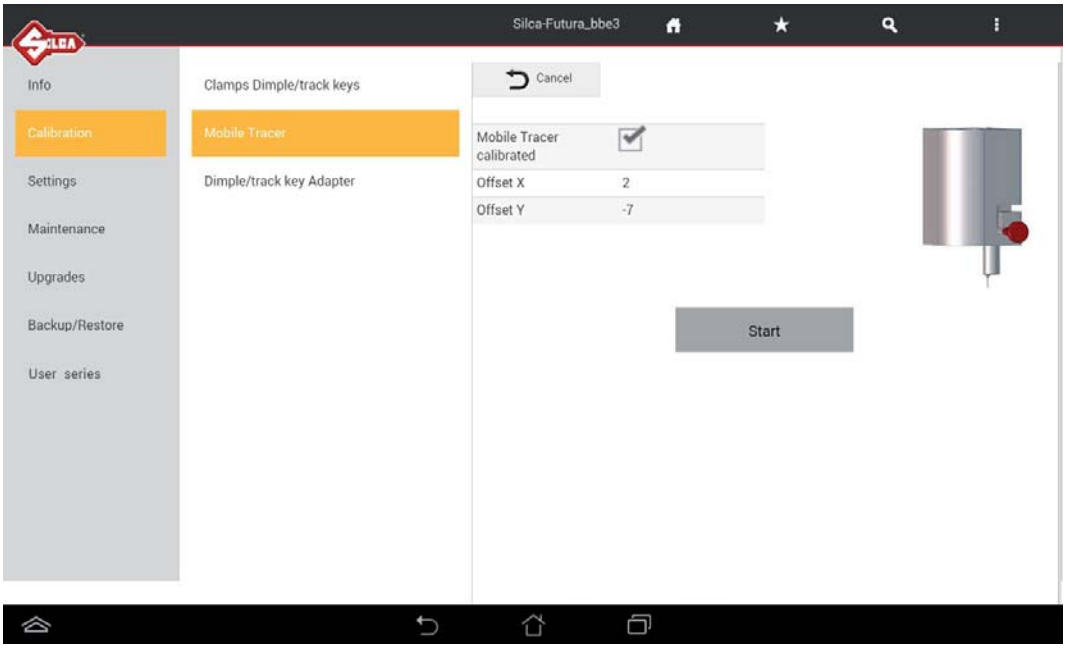

Hit START to begin calibration and follow the instructions on the screen.
At the end of the operation you are required to save the data entered. Hit YES to confirm.

4.2.3 DIMPLE/TRACK keys Adapters calibration

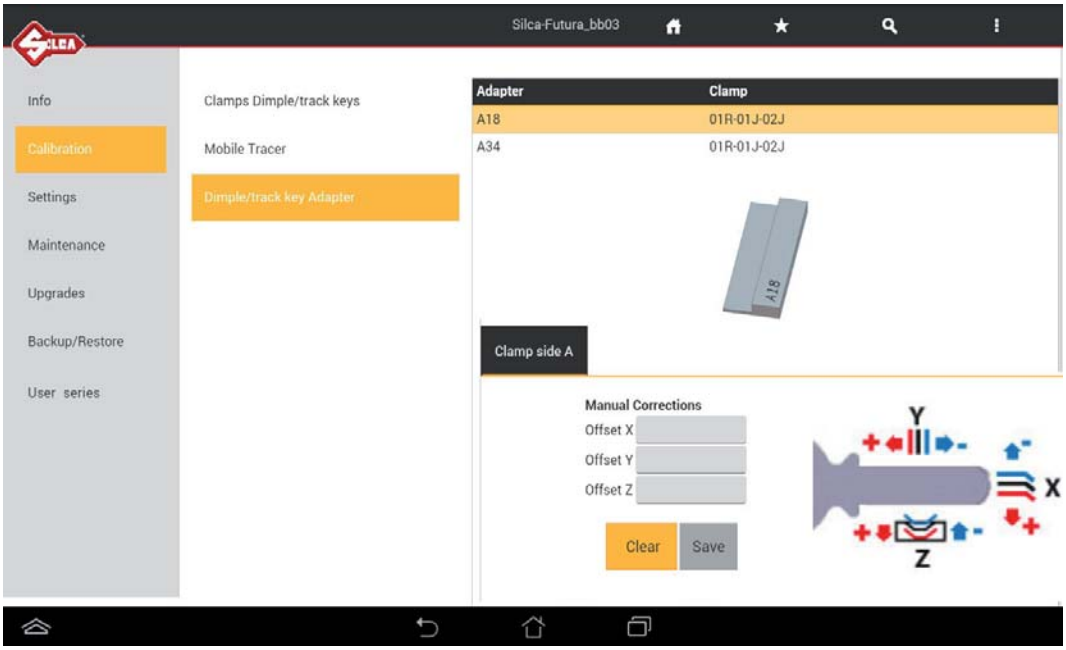

Positive value of Y: takes cut closer to stop.
Negative value of Y: takes cut away from stop.
Positive value of X: moves cut to the right of the axis.
Negative value of X: moves cut to the left of the axis.
Positive value of Z: lowers the cut from the axis.
Negative value of Z: raises the cut from the axis.
Adjustments: from -30 to +30 hundredths of mm) (+/- 118 thousandths of an inch)
Tap “Save” to confirm.

4.3 SETTINGS

The Settings menu contains:

- **Zero-point Calibration (DIMPLE/TRACK key)**
- **Options**
- **Network setting**

4.3.1 Zero-point Calibration (DIMPLE/TRACK key)

This operation requires the use of the 02T tracer.
ATTENTION: make sure the jaws are completely closed before starting.
Hit START and follow the instructions on the screen.

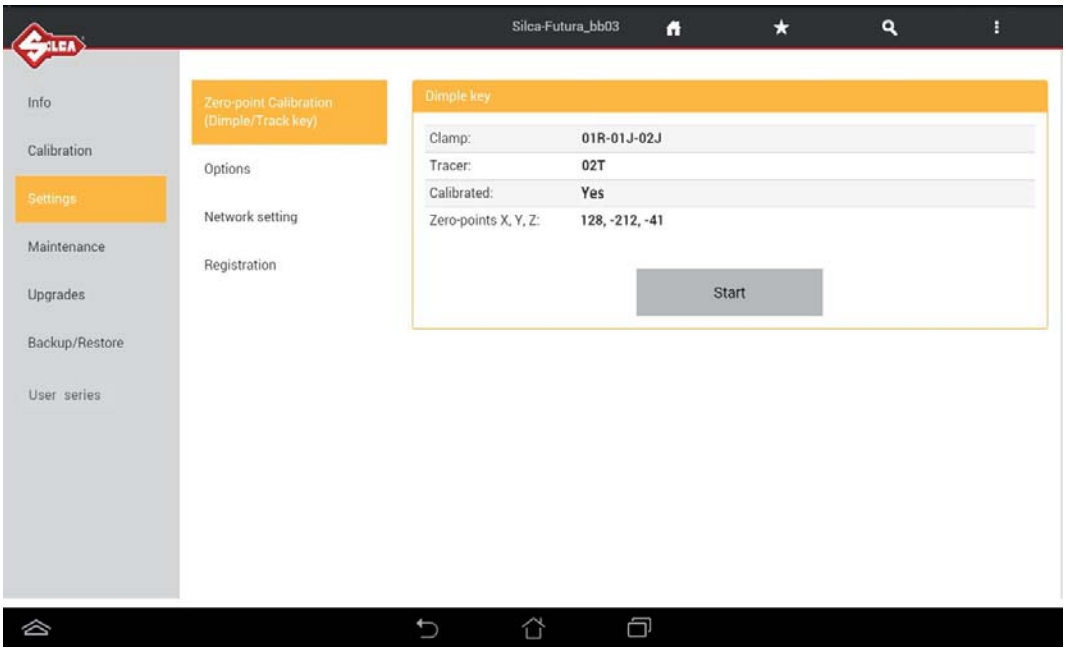

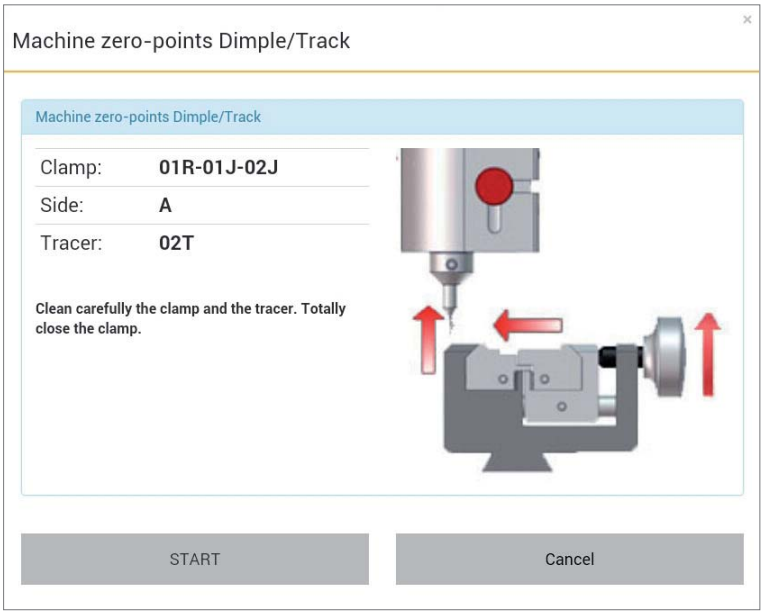

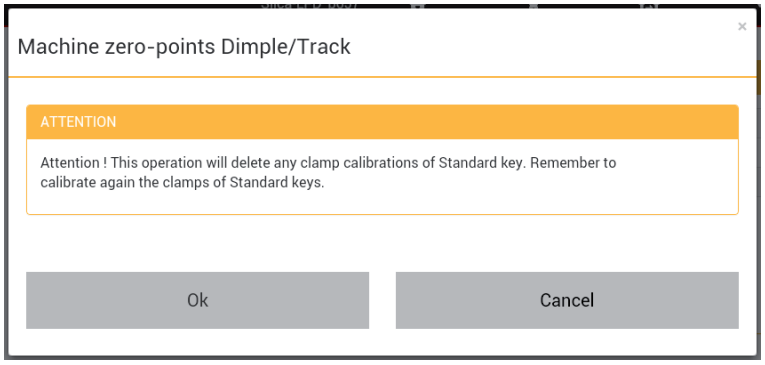

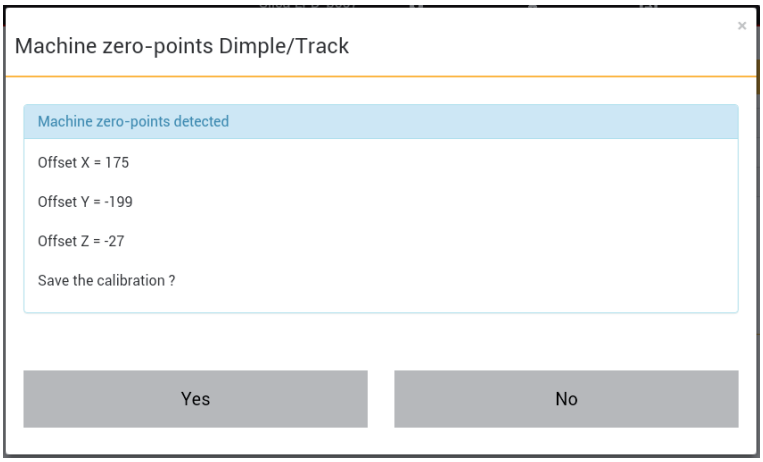

At the end of the operation you are required to save the data entered.
Hit “Yes” to confirm.

NOTE: Remember to replace the 02T tracer with the proper cutter prior to attempting to cut a key to prevent damaging the 02T tracer.

4.3.2 Options

The Options menu contains:

- General

- Preferences STANDARD key

- Preferences DIMPLE/TRACK key

4.3.2.a General

The following parameters can be modified:

- **Measurement Unit** (millimeters or inches)

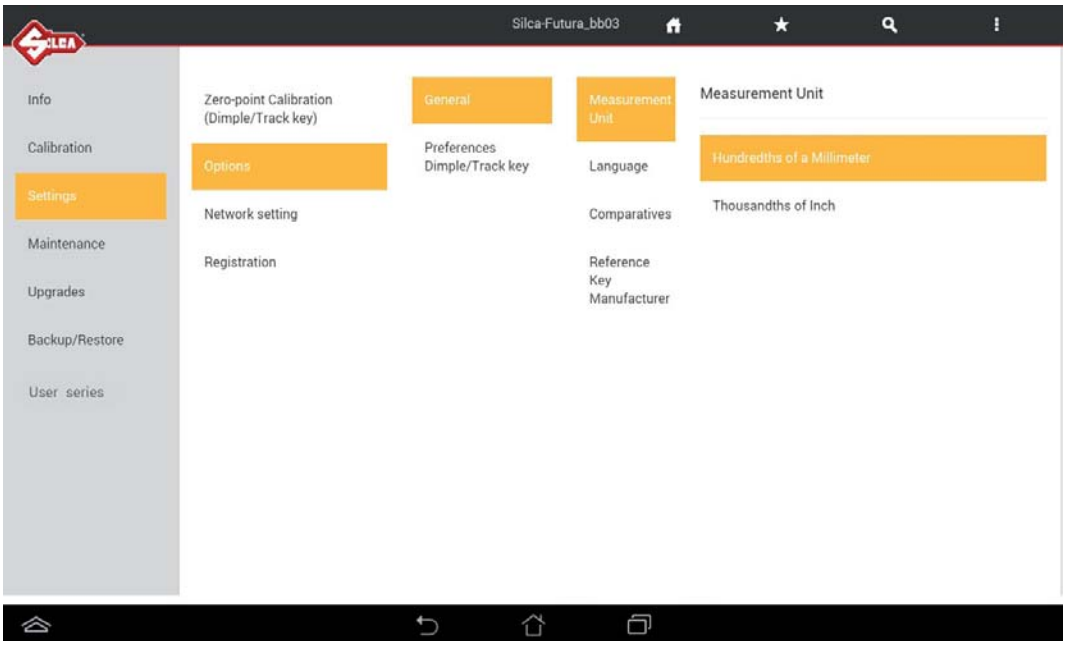

- **Language**

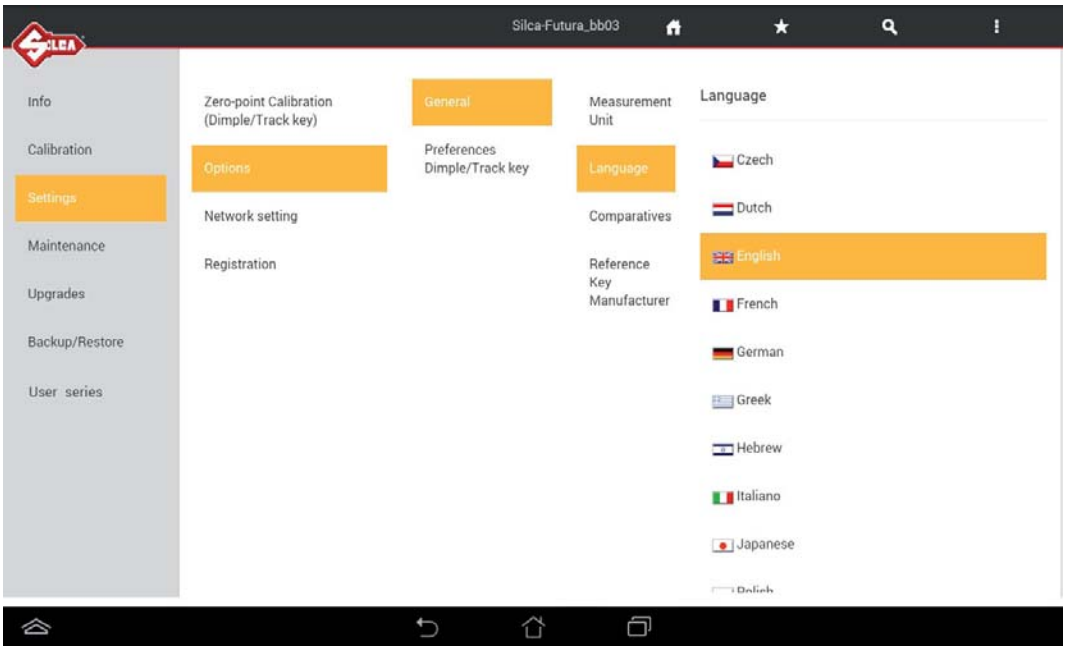

- **Comparatives** (comparative brands to visualize for key research)

It's possible to pick and/or unpick brands that can be seen after a research of comparatives articles.
In the comparative list Silca is activated by default.

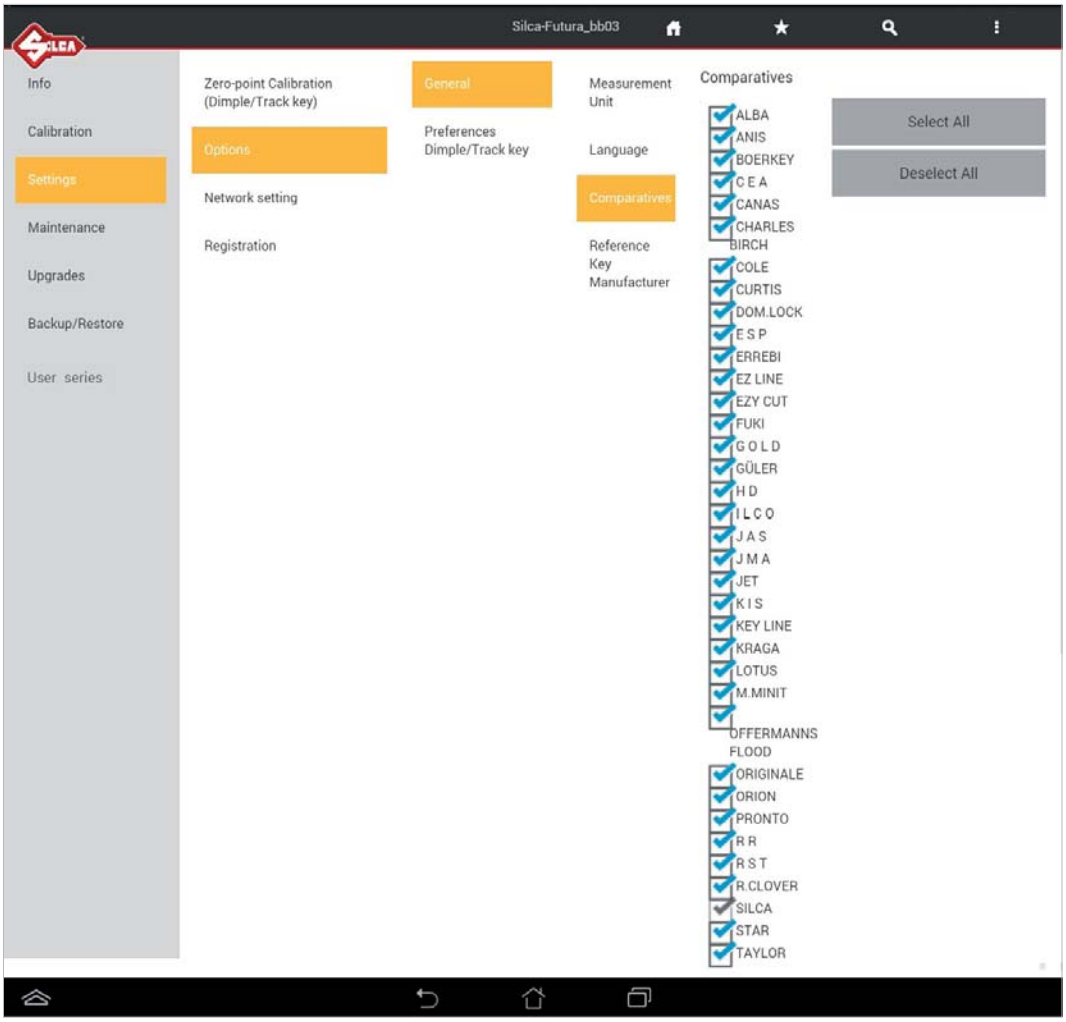

- **Reference Key Manufacturer**

After a key search… the key to be duplicated will always (with exception*) be the Silca reference by default. ILCO can also be set as a reference by default.

** keys that are not produced by Silca (copyright - obsolete - new keys)*

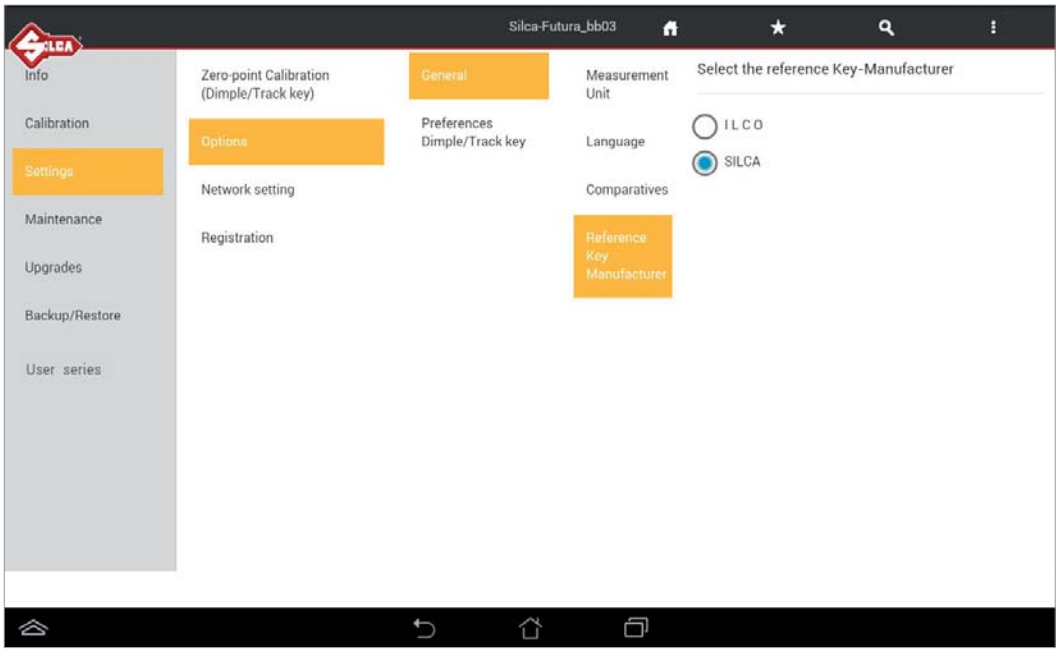

4.3.2.b Preferences DIMPLE/TRACK key

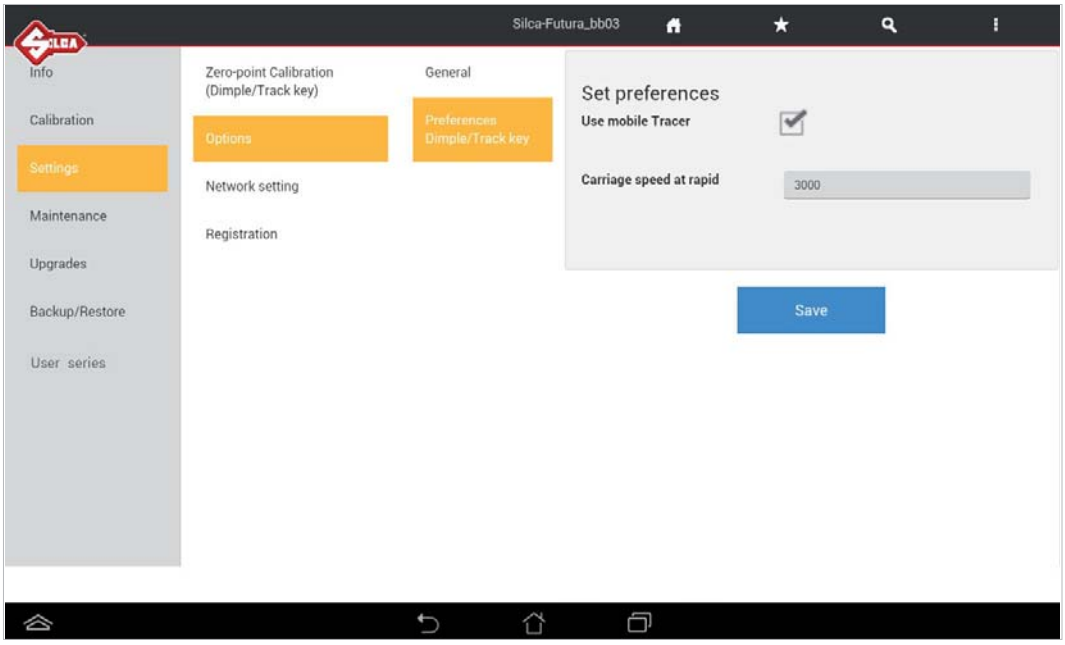

Set preferences: used to enable or disable the use of the 01T mobile tracer. If the field is not selected the 02T tracer is required, to be fitted into the shaft for the decoding operations.

Carriage speed at rapid: used to set the carriage speed for rapid movements; the pre-set value of 3000 is recommended by Silca.

4.3.3 Network setting

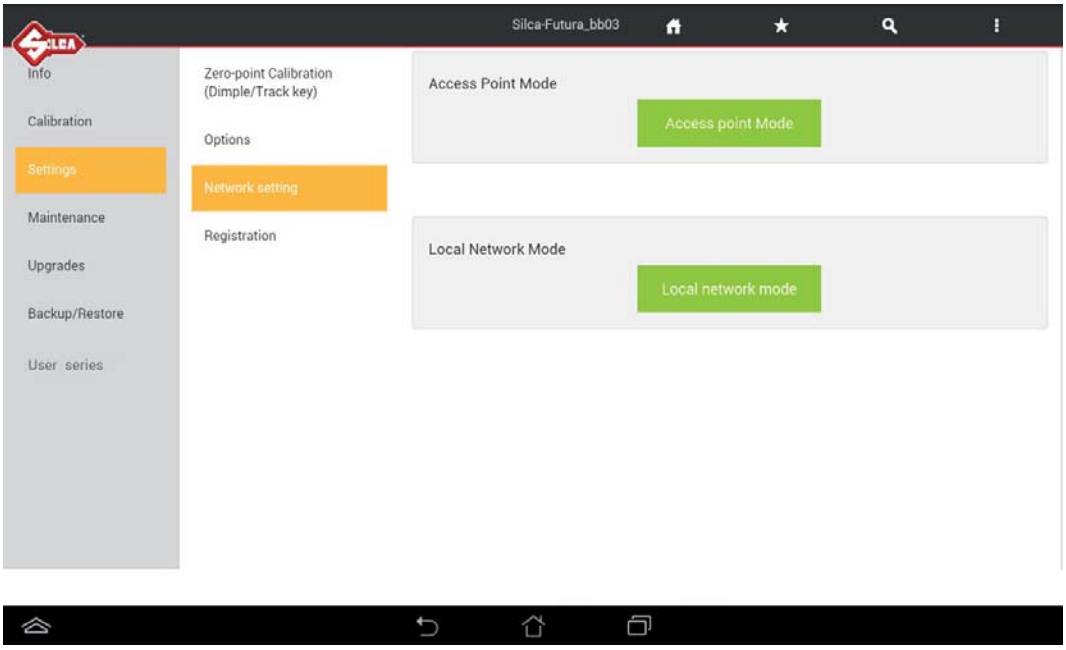

The Futura machine can be set up in one of the two modes below:

- **ACCESS POINT Mode**
- **LOCAL NETWORK Mode**

ACCESS POINT Mode

LOCAL NETWORK Mode

LOCAL NETWORK option

LOCAL NETWORK option

4.3.3.a ACCESS POINT Mode

In this mode the tablet connects directly to the machine. The machine is set on this mode in our workshops.

When the machine and tablet are switched on the connection automatically activates in around two minutes; if not, check the Wi-Fi connection from your tablet to see if the machine is included in the Wi-Fi networks that are found; the Futura machine will appear as **Silca-Futura_....**

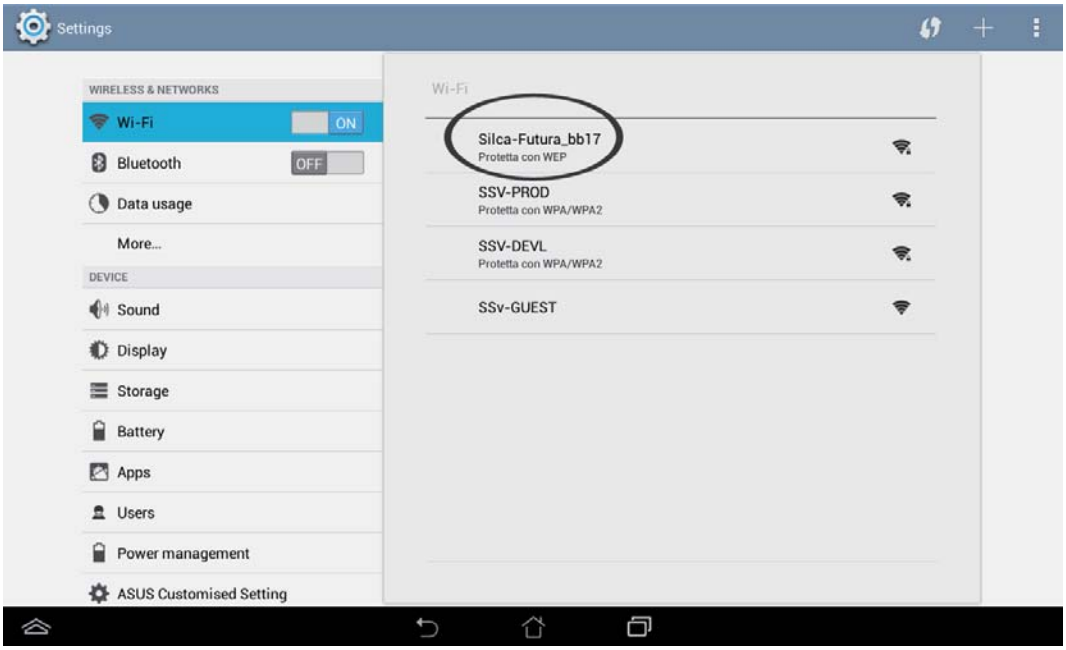

If it is not connected pick “Silca-Futura_...” and input the password which correspond to the Futura machine serial number (made up of 13 numbers).

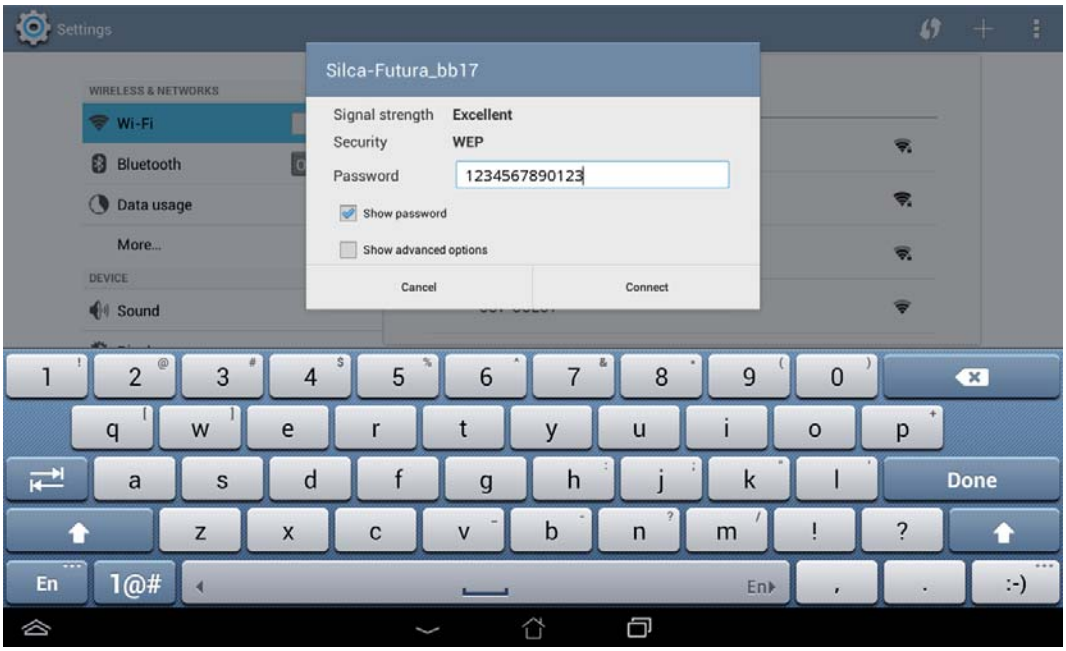

Option to change the Wi-Fi channel: is used in cases when the (point to point) communication cannot be properly connected since there are too many devices tuned to the same channel.
It also permits the user to adapt to the rules and restrictions of Wi Fi channel use in their country.
To change the channel one must first be connected, select the new channel and then reboot the machine.

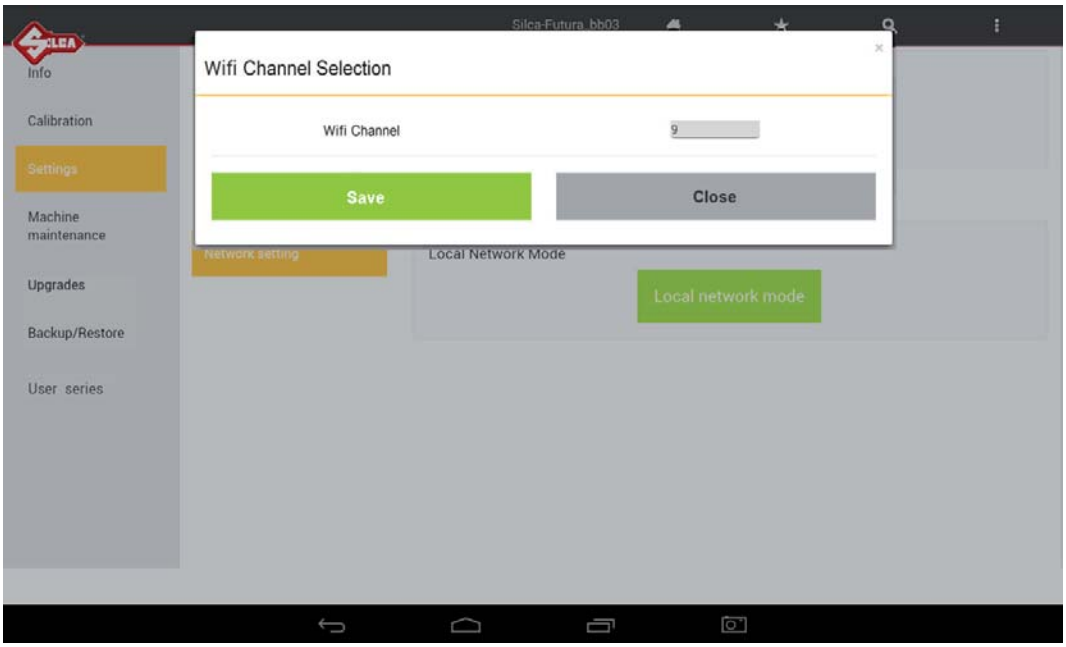

4.3.3.b LOCAL NETWORK Mode

This mode is used to connect the machine to a Wi-Fi router. Connect the tablet to the same router to communicate with the machine.

There are 3 steps that should be taken:

1) FUTURA CONNECTION TO A WI-FI ROUTER

Pick the network to which you want to connect by tapping the SSID field and then inserting the network's password.

Tap "Save" to reboot the machine in Local Network. The machine should initially reboot with a flashing white and blue light, to then end with two flashing blue lights that indicate the connection to the local network was successful.

If the inserted password was incorrect the machine would reboot in Access Point mode with an intermitted flashing blue light.

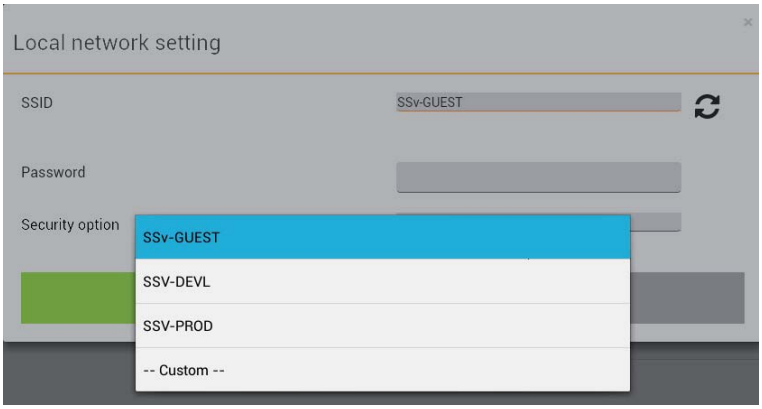

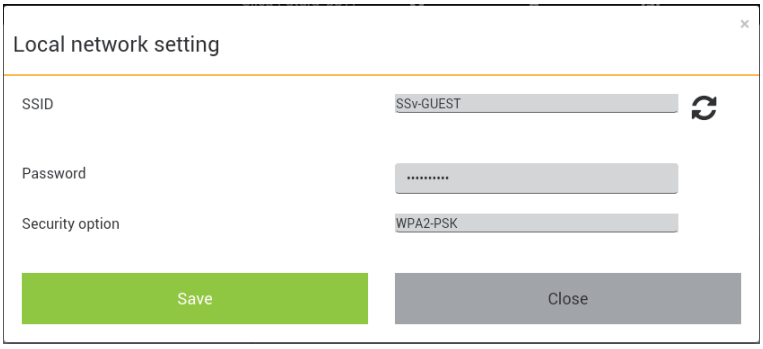

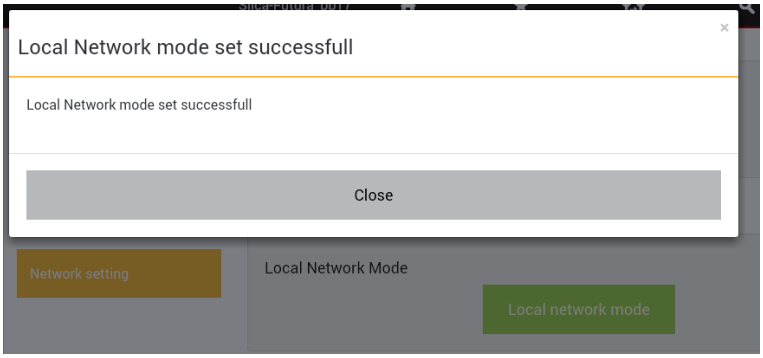

2) CONNECTING TABLET TO A WI-FI ROUTER

From the tablet's "Settings" menu tap on the desired network to connect.

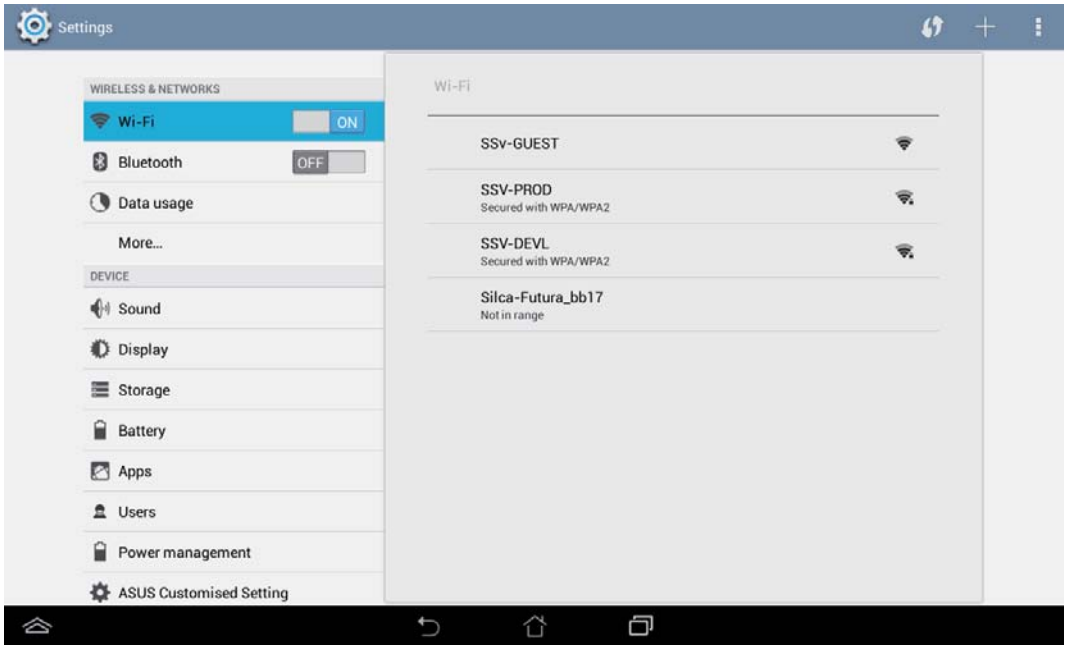

3) REBOOTING THE FUTURA'S APPS

Open the left pull-down menu by swiping from left to right and pick "Connect to".

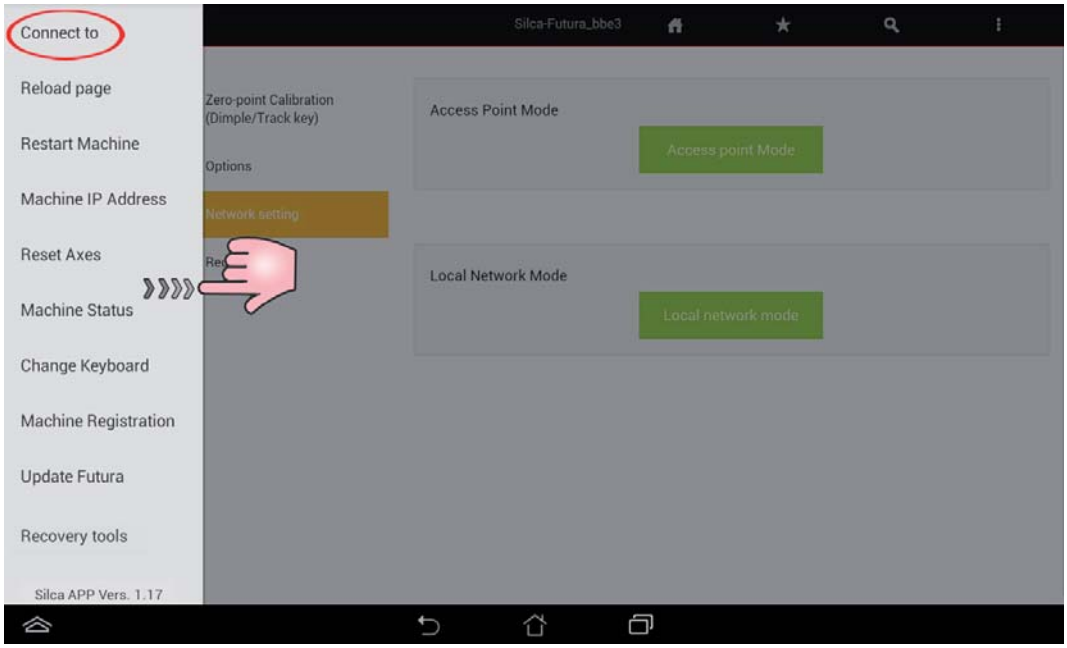

Tap on “Start search” in the following window.

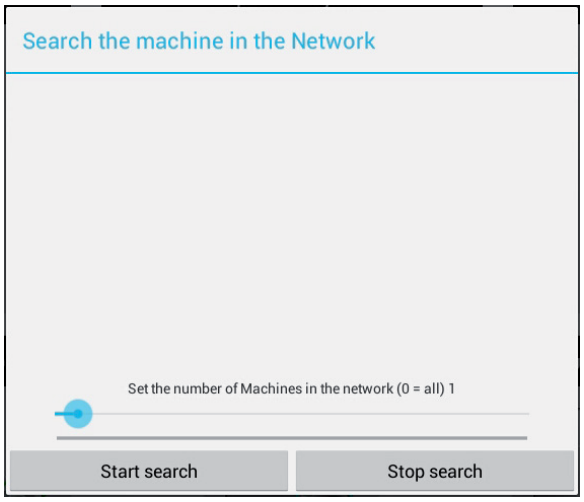

Tap on “Silca-Futura…” in the following window to obtain a connection between the **APP Silca.apk** and the machine.

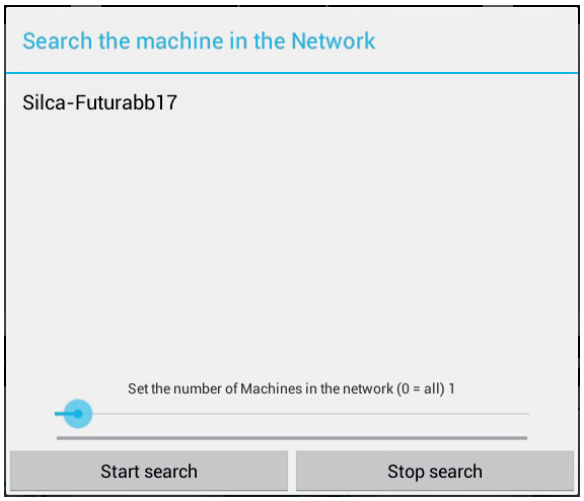

The last mode setting will be automatically saved by the machine at each successive reboot; if the last set mode was “Local Network” and this mode is not recognized within a certain time frame the Futura will automatically go to “Access Point” mode.

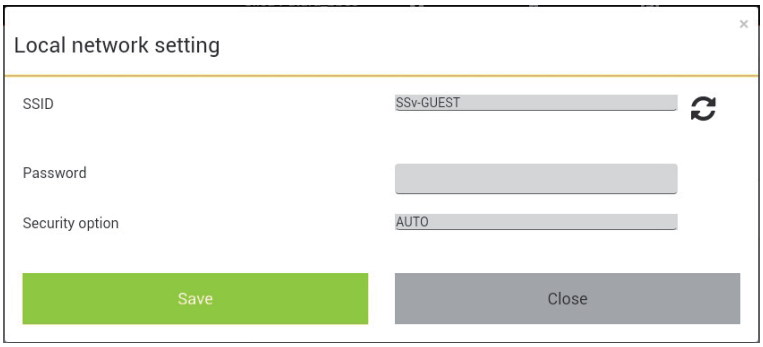

4.4 MACHINE MAINTENANCE

- **Digital Inputs**

This function is used to test operation of the digital inputs on the electronic board to which they are connected: screen micro, gauge position sensor, electrical contact, etc.

To perform the test carry out the movement described for each item and check that the relative signal changes color from red to green.

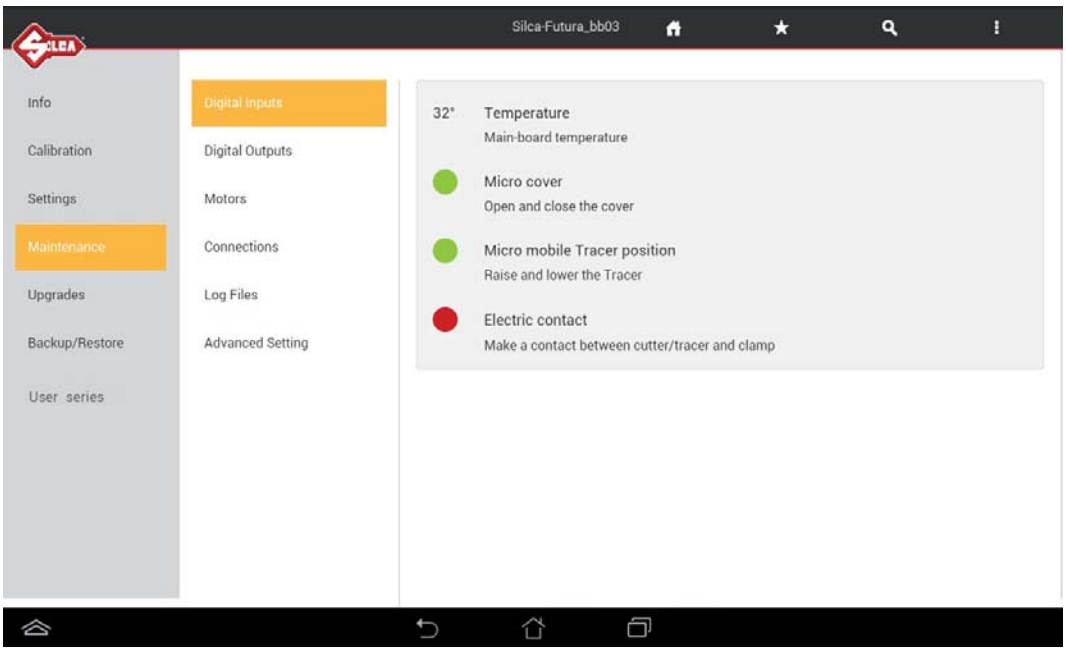

- **Digital Outputs**

This function is used to test operation of the digital outputs on the electronic board and relative devices connected to it. To perform the test hit ON on the screen.

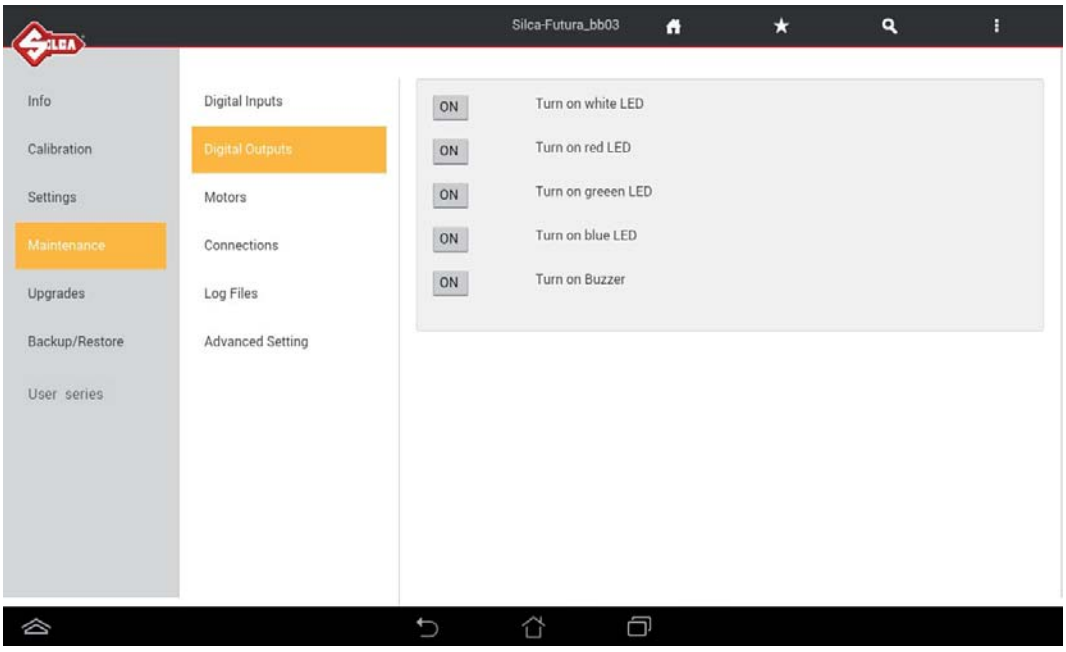

- **Motors**

This function is used to test operation of the 3 step motors for the X, Y and Z axes (at the moment the B axis is not used). To perform the test hit “+” for the axis involved.

Note: The carriage must not reach and hit the end of its run.
The Reset key homes the axes.

NOTE: hit “-” only when the value shown in the “Working position” field is positive.

Axis clearance sensor: the ring becomes green when activated.

- **Cutter motors**

To perform the test tap the button for the motor to be tested: check that the cutter turns for 5 seconds.

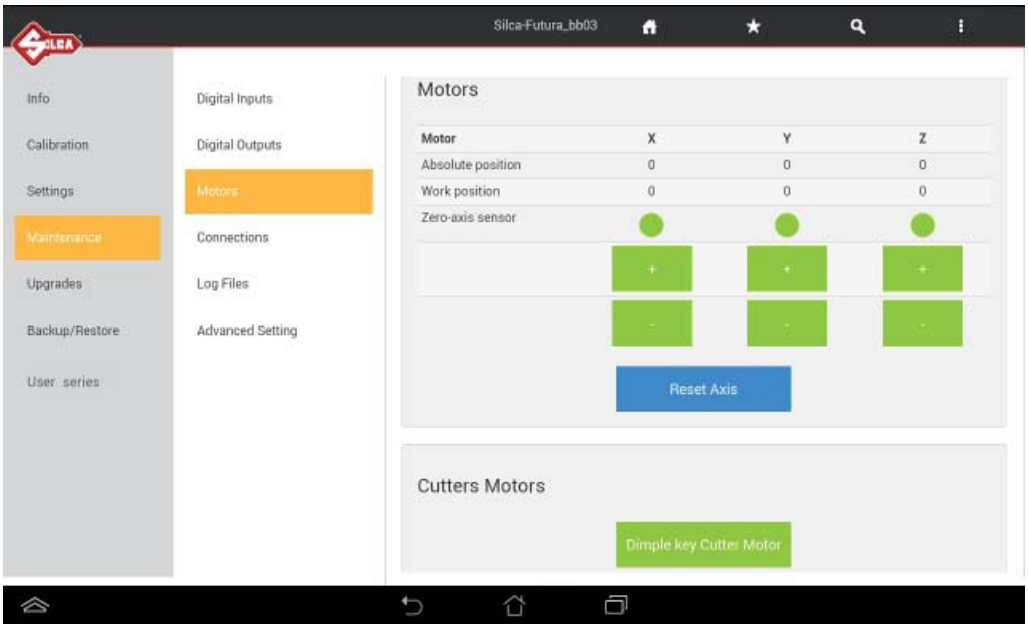

- **Connections**

This function shows all the machine connections that are available.

- **Log Files**

The Log file is requested by Silca when on board machine software anomalies are encountered.
This function permits to create and save a log file:
- on a USB key connected to the machine's USB port.
- or directly to Silca's Server (with the Futura machine connected to a local network) Wi-Fi or LAN cable connection).

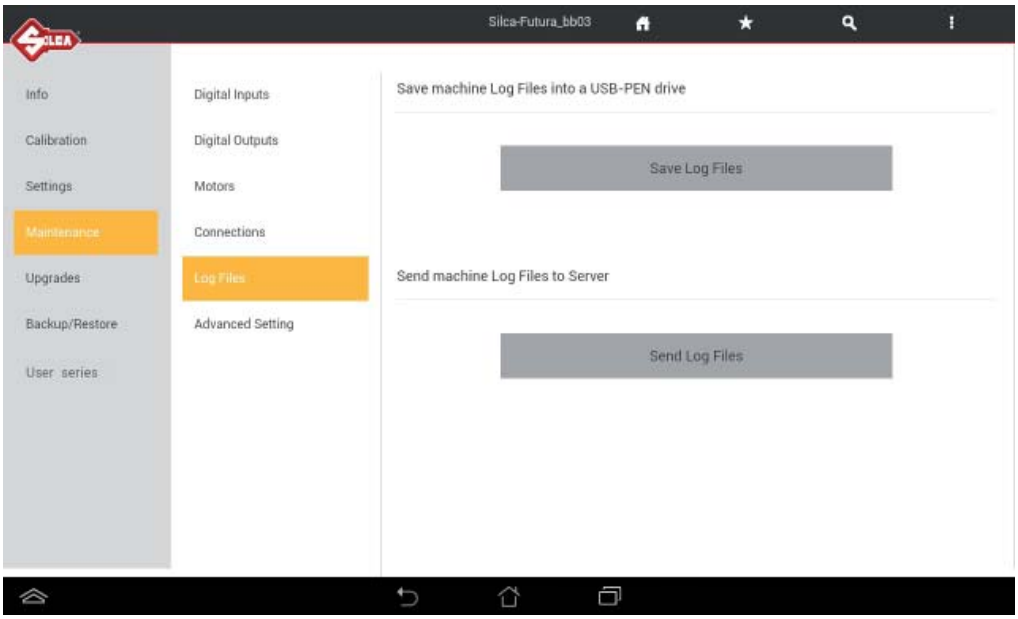

- **Advanced Setting**

Function for Silca internal use.

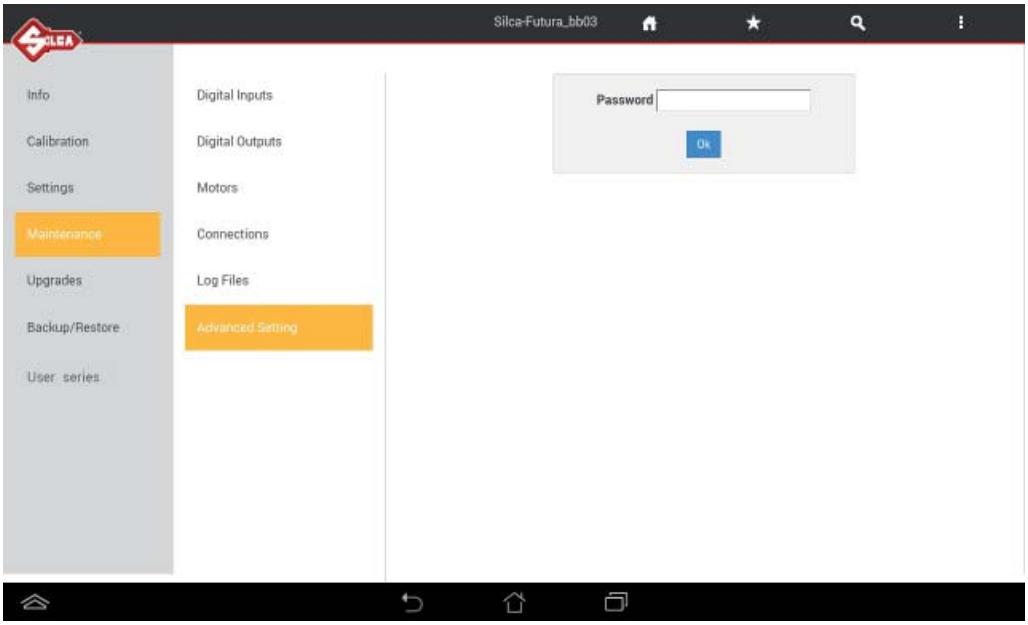

5 MACHINE UPDATE AND REGISTRATION

5.1 MACHINE REGISTRATION

To download the machine software updates you must be registered on the SILCA WEB FUTURA server. **This operation is required only on first access**.

From the 2.6.0 version of the program on, after cutting at least 50 keys you are required to register the machine on the Silca Web FUTURA server.

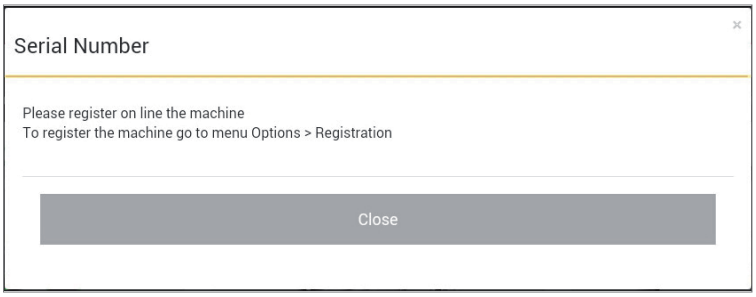

- **If the machine is not registered now, the same message will appear every time FUTURA is started.**
- **If the machine is not registered it will not be possible to download software updates.**

There are 2 ways to register:

Method 1: FUTURA machine and Tablet connected in local Wi-Fi network mode, or FUTURA machine in Access Point mode connected to the router by Ethernet cable.

Method 2: FUTURA machine and Tablet connected in Access Point mode (take the Tablet where it can be Wi-Fi connected).

Method 1

FUTURA machine and Tablet connected in local Wi-Fi network mode, or FUTURA machine in Access Point mode connected to the router by Ethernet cable

- Start the FUTURA program; tap the icon OPTIONS -> Settings -> Registration
- Enter the data into the fields shown (those with * are required) and then tap Register and wait for a message communicating that the machine has been registered. Tap Close.

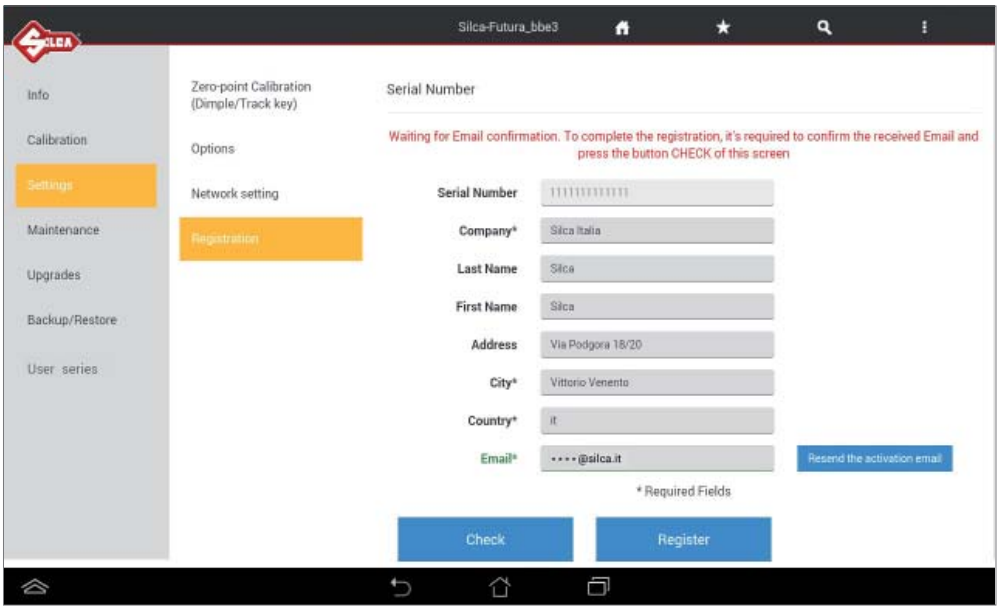

A message confirming registration will arrive at the address given.
Use your mail program to open the e-mail from Silca and click on “**Validating email**”.


Email address validation

Your email address has not been validated.
Click on the link below to validate the email address entered.

Email to validate: *****@silca.it

Validating email

If you do not see correctly the email, copy and paste the link below into your internet browser
https://www.silcawebsw.biz/Futura/confirmEmail?data=MTE1MzE4MTUyMjIwNjswMDoyMTpmMzowNjpiNjo2MztsaXZpby5yb3NzaUBzaWxjYS5pdA==

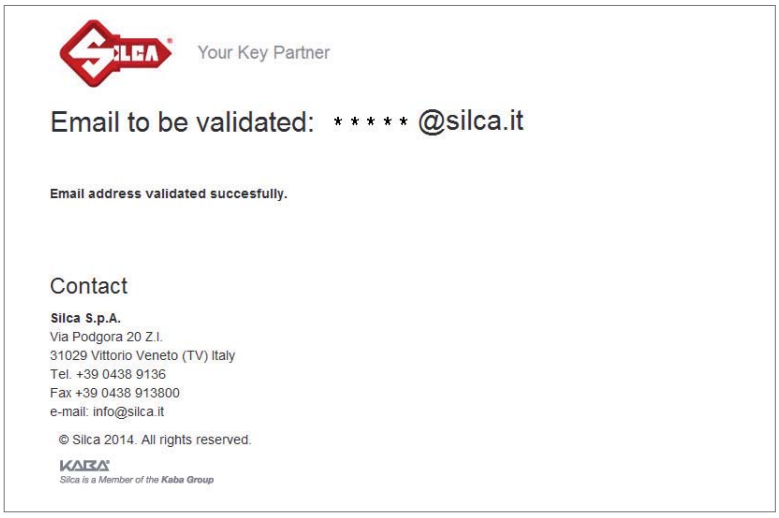
Your Key Partner

Email to be validated: ***** @silca.it

Email address validated succesfully.

Contact

Silca S.p.A.
Via Podgora 20 Z.I.
31029 Vittorio Veneto (TV) Italy
Tel. +39 0438 9136
Fax +39 0438 913800
e-mail: info@silca.it

© Silca 2014. All rights reserved.

KABA
Silca is a Member of the Kaba Group

At the end, tap “Close” and then “Check” to conclude the registration procedure on the Tablet.

Method 2

FUTURA machine and Tablet connected in Access Point mode

NOTE: the Tablet must be taken where there is a Wi-Fi connection with internet access.

With the FUTURA machine and Tablet connected in Access Point mode, start the Silca FUTURA application. On the Tablet scroll from left to right to open the drop-down menu, as illustrated below.

Tap “Machine Registration” to find the serial number.

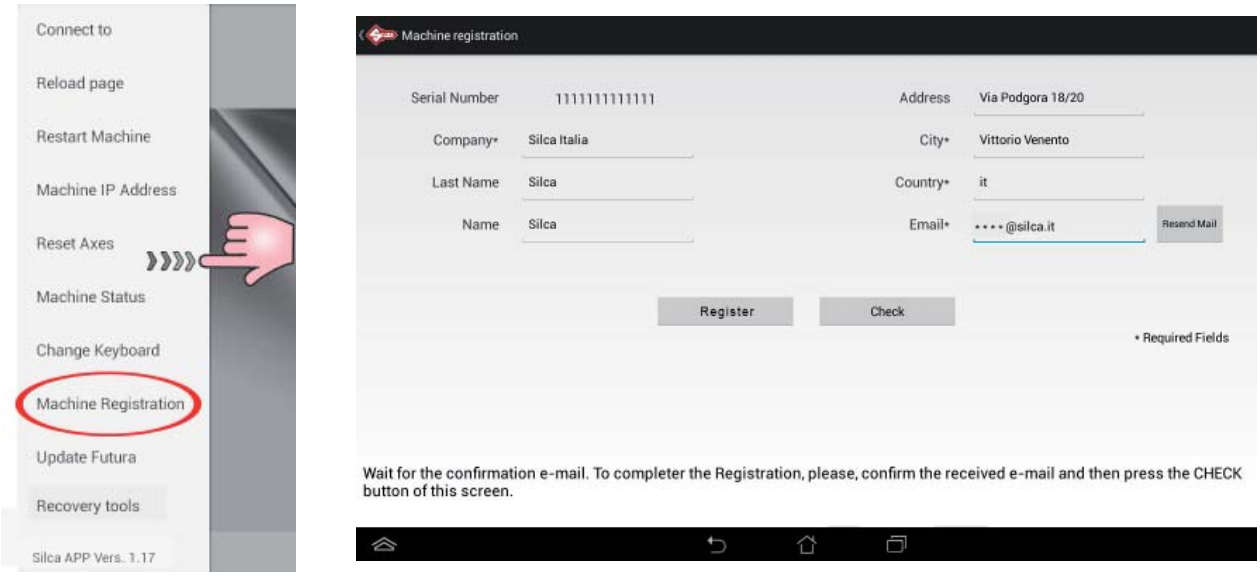

Now the Tablet can be taken (without turning it off) to a place where there is a Wi-Fi network for machine registration.

- Connect the Tablet to the Wi-Fi network, start the Silca Futura application, go back to the drop-down menu and tap Machine Registration.
- Enter the data into the fields shown (those with * are required) then tap Register.
- A message confirming registration will arrive at the address given. Use your mail program to open the e-mail from Silca and click on “**Validating email**”.

Email address validation

Your email address has not been validated.
Click on the link below to validate the email address entered.

Email to validate: *****@silca.it

Validating email

If you do not see correctly the email, copy and paste the link below into your internet browser
https://www.silcawebsw.biz/Futura/confirmEmail?data=MTE1MzE4MTUyMjIwNjswMDoyMTpmMzowNjpiNjo2MztsaXZpby5yb3NzaUBzaWxjYS5pdA==

Your Key Partner

Email to be validated: ***** @silca.it

Email address validated succesfully.

Contact

Silca S.p.A.
Via Podgora 20 Z.I.
31029 Vittorio Veneto (TV) Italy
Tel. +39 0438 9136
Fax +39 0438 913600
e-mail: info@silca.it

© Silca 2014. All rights reserved.

- At the end, tap “Check” on the Tablet to conclude the registration procedure.
- Go back to the FUTURA machine and re-connect in Access Point mode.

5.2 MACHINE SOFTWARE UPDATE

ATTENTION: Do not insert a USB modem sticks for the transfer of data in the machine USB port.

FUTURA can be updated in one of the following ways:

Update with LOCAL NETWORK mode
Connect the FUTURA machine to the local Wi-Fi network (Attention: first set up FUTURA and then the Tablet in Local Network mode)

Fig. 1

Update with LOCAL NETWORK option
Connect the FUTURA machine to the LOCAL network inserting the network cable to the machine Ethernet port (the machine must remain in Access Point mode).

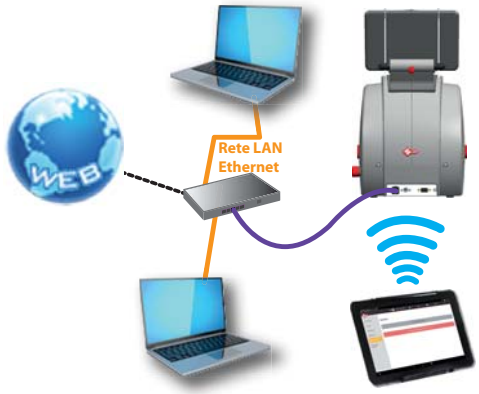

Fig. 2

Update with SRS Program (Silca Remote Service)
1) Use the Silca Remote Service (SRS) to download the software update from the web. 2) Use a USB PEN to transfer the update onto the machine.

Fig. 3

Update from TABLET
1) Use the Tablet connected to a Wi-Fi network with Internet access to download the software update. 2) Connect the Tablet to the machine in ACCESS POINT mode to transfer the update to the machine.

Fig. 4

5.2.1 Update in LOCAL NETWORK mode (Fig. 1 - Fig. 2)

ATTENTION: Make sure there is no USB PEN in the Futura machine USB port during updating.

To upgrade the Futura machines software in manual mode, follow the steps indicated below.

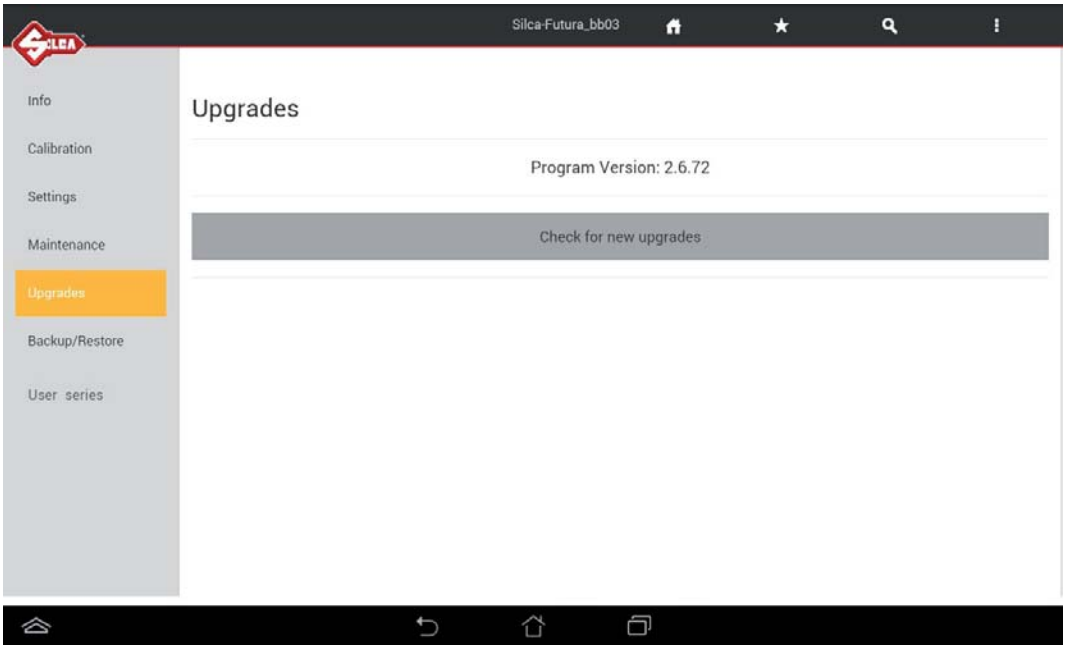

Fig. 5

Tap on “Check for Updates” to get a list of what will be downloaded with the update.

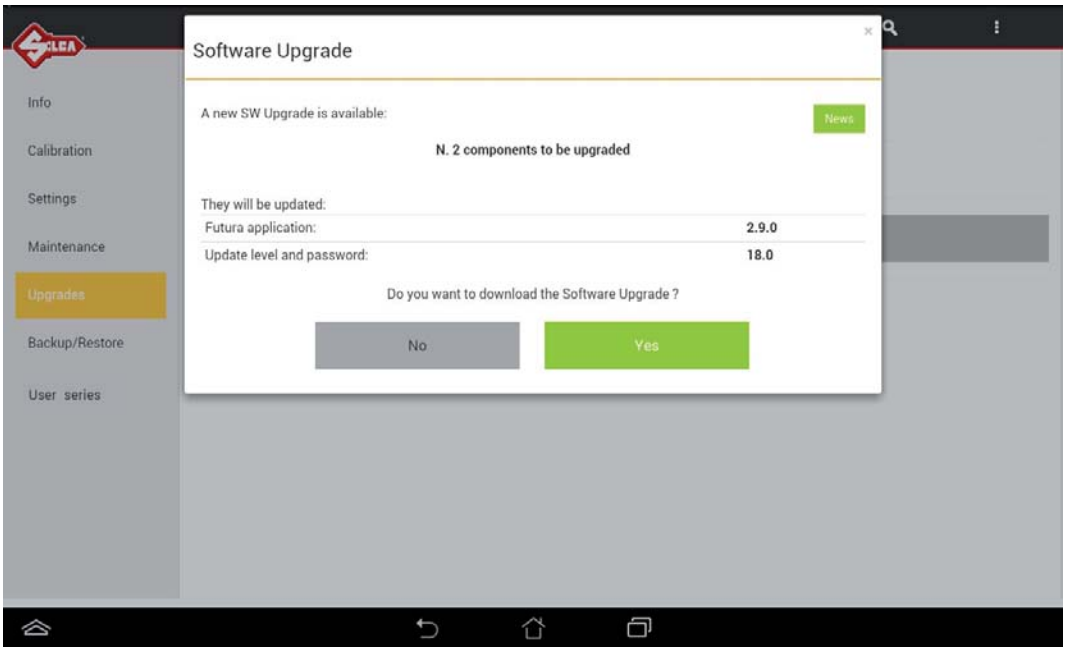

Fig. 6

Tap “News” to see information about the update to be installed on the machine.
Tap on “Yes” to start downloading.

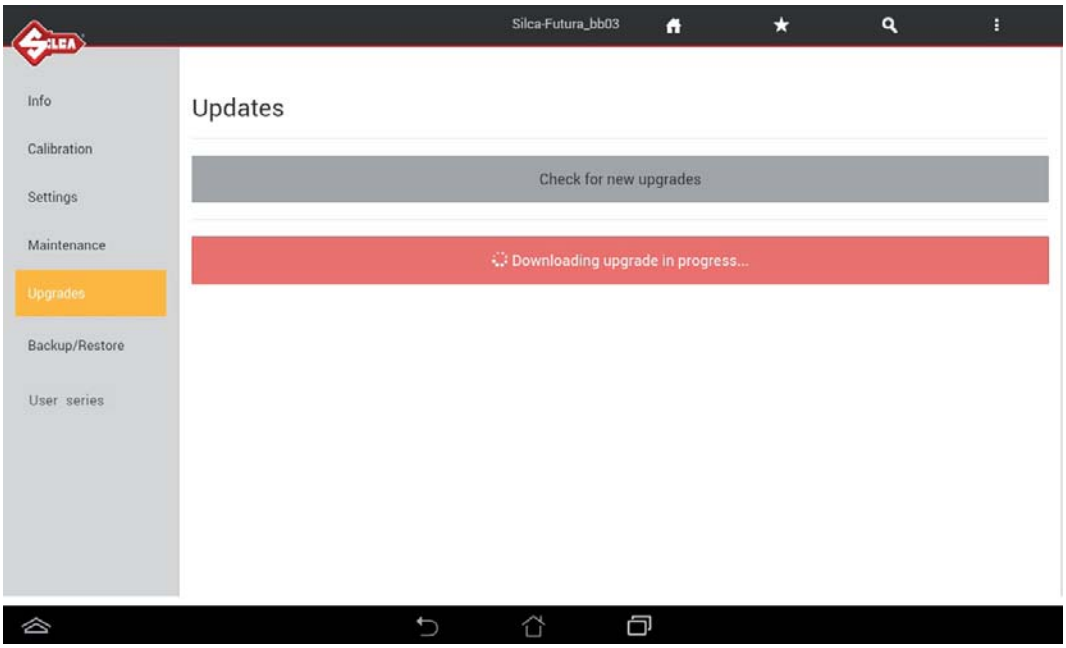

Fig. 7

When download is over, you will be asked to restart the FUTURA machine (procedure run by the software). Follow the on-screen instructions).

5.2.2 Update with SILCA REMOTE SERVICE Program (Fig. 3)

If you do not have the "Silca Remote Service" Program on your PC it is very easy to install. Access the Silca website **www.silca.biz**, go to the menu Products -> Silca Key Programs -> SKP Modules -> Silca Remote Service, click on download and install on your PC.

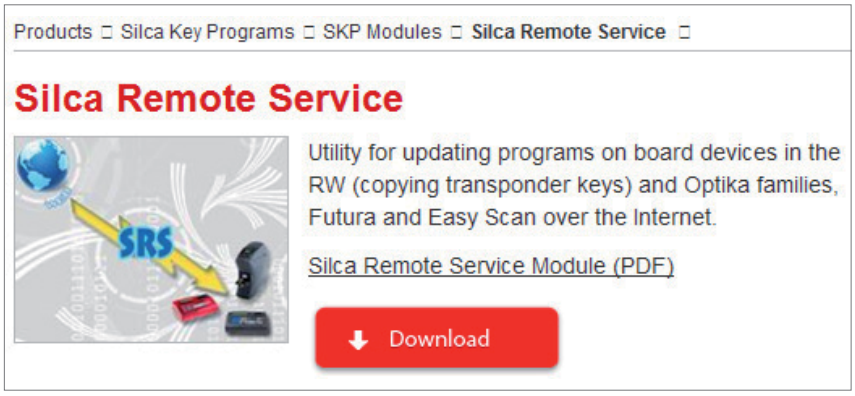

- Start the program Silca Remote Service, select the FUTURA machine and follow the on-screen instructions. You will be required to enter the FUTURA machine serial number and then to insert a USB PEN into the PC. **Attention: check that the USB PEN is empty and that the format is FAT32**).
- Ensure that the machine is off (red push button) and the FUTURA application on the Tablet is off. Turn off the Tablet.
- Insert the USB PEN into the FUTURA machine USB port (on the back of the machine).
- Start the FUTURA machine and wait a few minutes for the intermittent white light to start flashing. Remove the USB PEN from the machine (without turning it off). Wait for FUTURA to restart (indicated by an intermittent blue light). Turn on the Tablet and start the Futura APP.

ATTENTION: do not unplug or turn off FUTURA while the update is downloading.

5.2.3 Update from TABLET (Fig. 4)

ATTENTION: Make sure there is no USB PEN in the Futura machine USB port during updating.

This update procedure is employed to update the FUTURA machine using the Tablet, after taking the Tablet to a place where there is a Wi-Fi network with internet access.

Before proceeding, check on the Machine Registration screen (on the Tablet scroll from left to right to open the drop-down menu):

- that the FUTURA machine serial number appears in the serial No. field
- that the machine is registered
- that the Tablet is not turned off

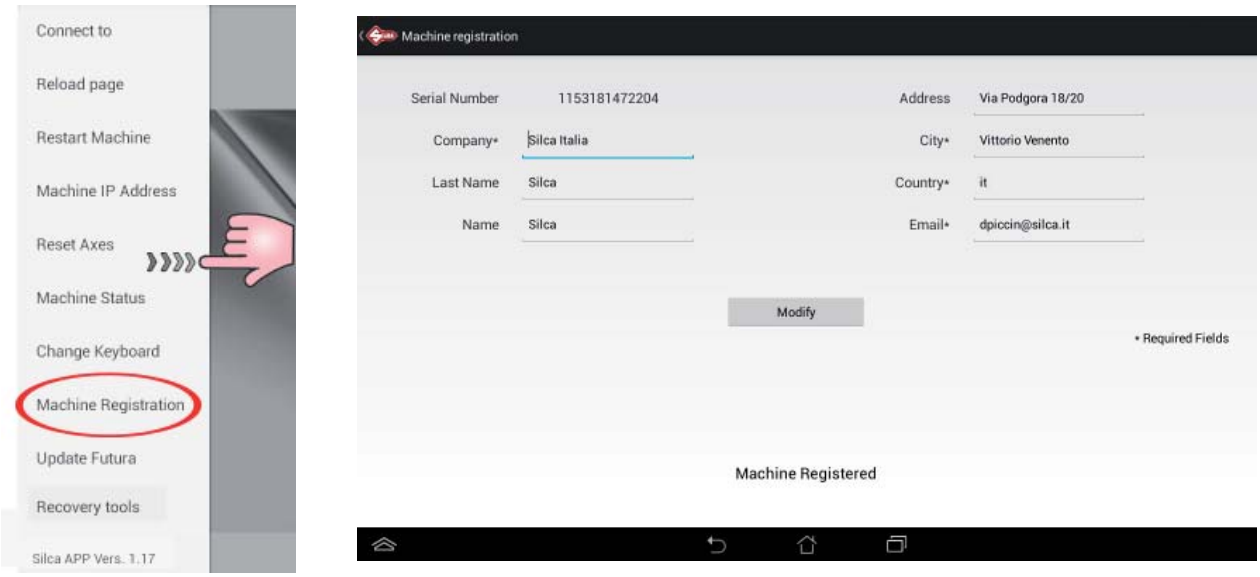

- Take the Tablet where there is a Wi-Fi network, connect the Tablet to the Wi-Fi network and start the Silca FUTURA application.
- On the Tablet scroll from left to right to open the drop-down menu.

- Tap “Update Futura” to see a screen showing machine information. Tap “Check updates” and wait a few minutes.

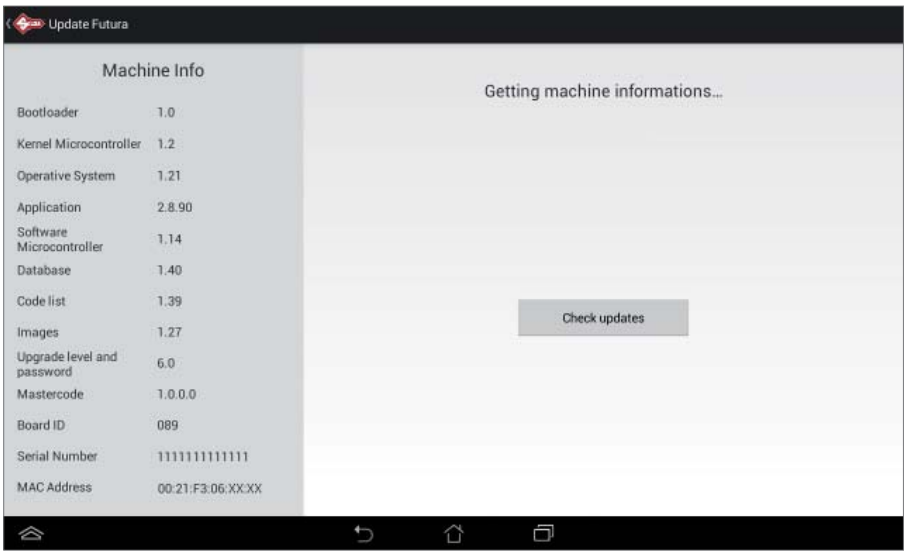

- At the end tap Download.
- When the message appears to connect to the machine for update installation, go back to the FUTURA machine, start the Silca FUTURA application and connect in Access Point mode.
- On the Tablet scroll from left to right to open the menu, tap “Update Futura” and then “**Apply update**”. Wait a few minutes until a message appears to restart the FUTURA machine (procedure run by the software). Wait a few minutes for the machine to start, then connect to the Tablet when the intermittent blue light begins flashing.

5.3 APP UPDATE (Silca.apk e SilcaKeyboard.apk)

After you updated the Futura machine's software, when the program starts up, you may see the following screen indicating that a new version of the **Silca.apk** or **SilcaKeyboard.apk** is avaialble.

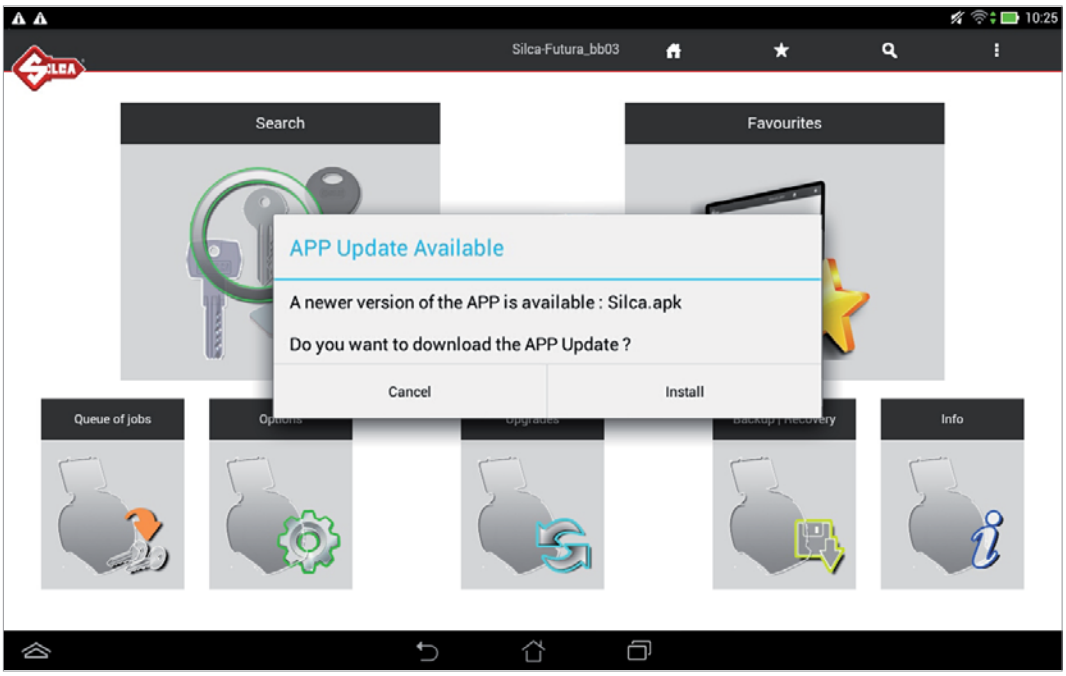

Fig. 8

Tap on "Install" and proceed with updating the APP.

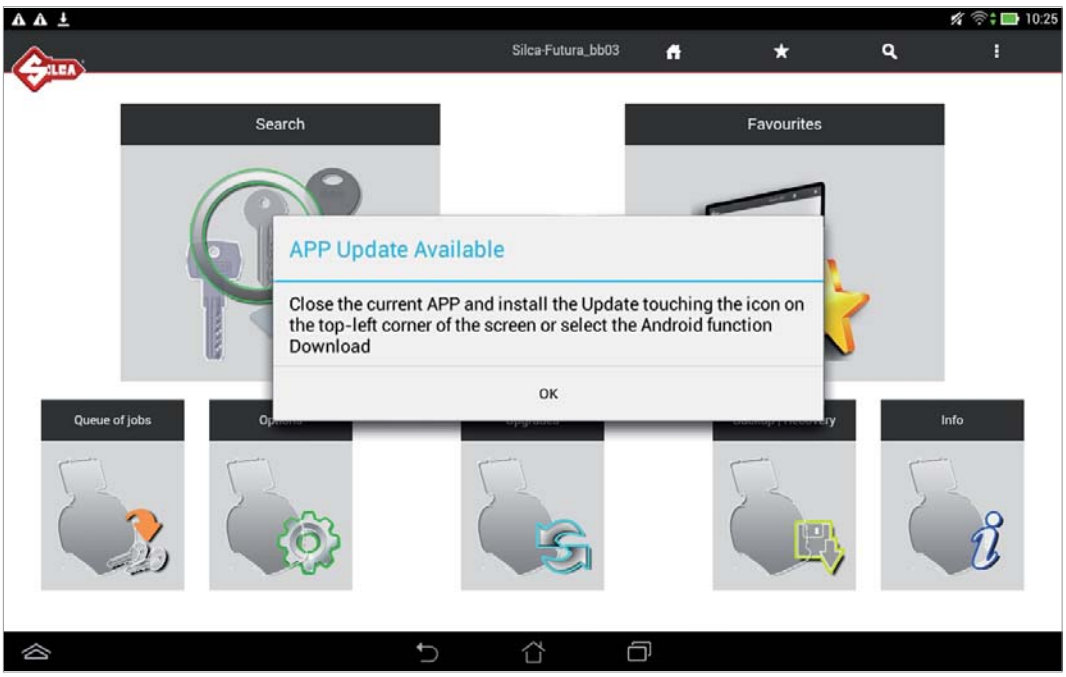

Fig. 9

Close the application that is opened by tapping on  and dragging the Futura APP downwards off the screen (see Fig. 10).

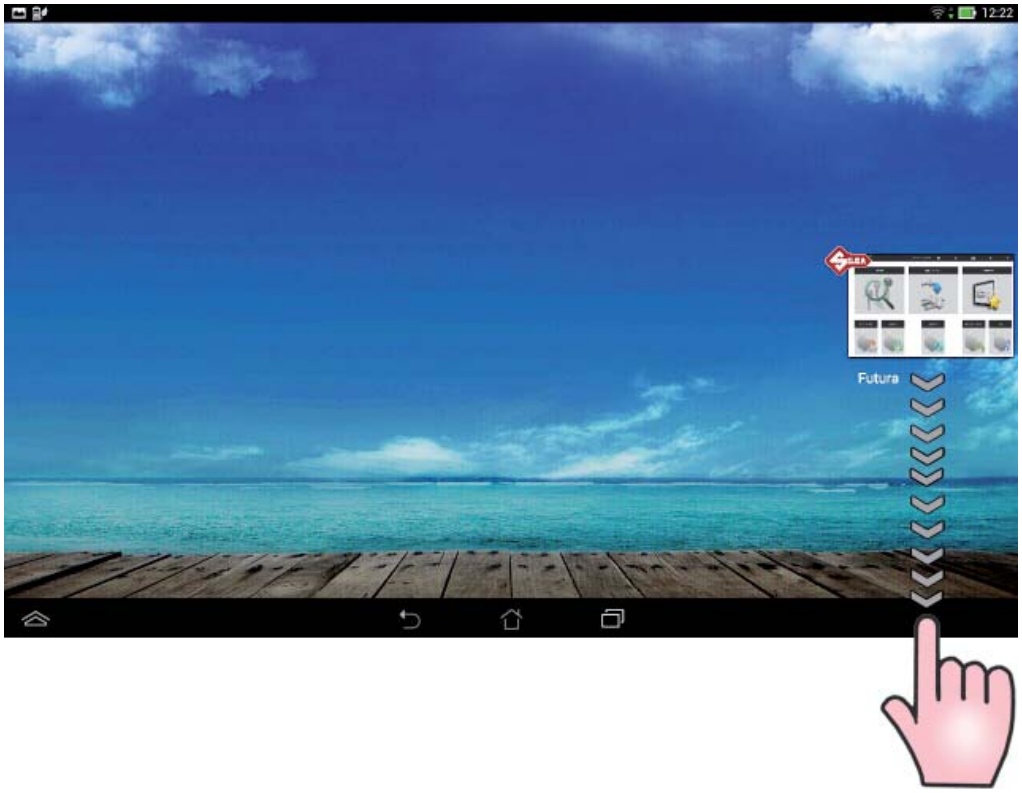

Fig. 10

Tap on “Downloads”  (Fig. 11).

Fig. 11

Select **Silca.apk** and tap on “Install” (Fig. 12).

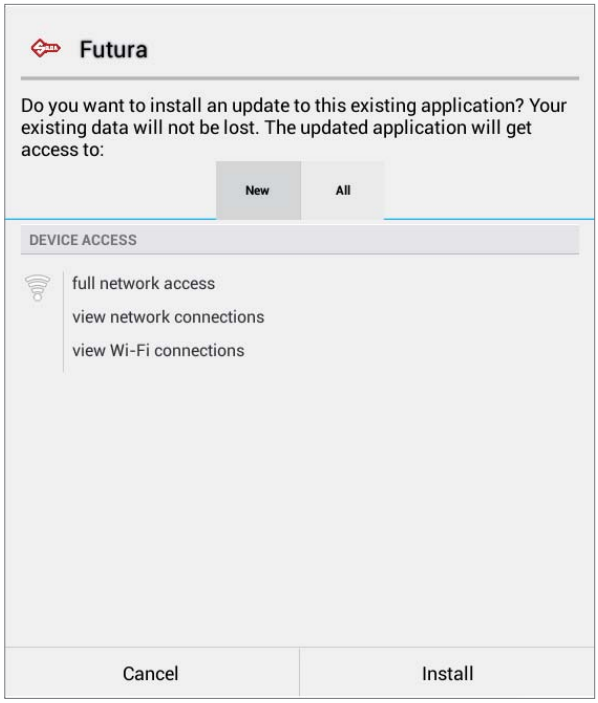

Fig. 12

Wait for the update to finish.
Do the same for upgrading the **SilcaKeyboard.apk**.

6 BACKUP / RECOVERY

This function permits to create and save a backup (backup User database) file in a USB key that can be connected the machine's USB port.
Also provided is the recovery (Restore User database) function always using the USB key with the last file that was saved on it.

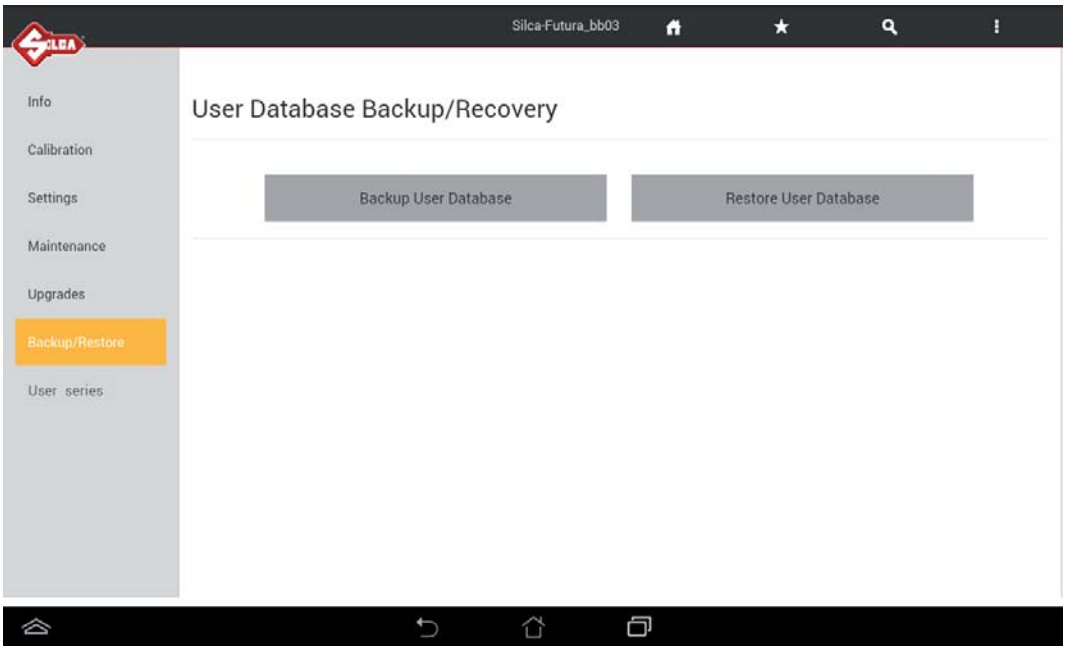

7 USER SERIES

Function accessible from “Options => User Series”.
This function is available to the user to import a code table in XML-Keso or CSV format, associating it to a data card and thereby creating a new user series.

- Use a USB-PEN, FAT32 format, and copy onto it the file (or files) with the table to be imported. **Note: the file must not be in a folder.**
- Insert the USB-PEN into the Futura USB port.

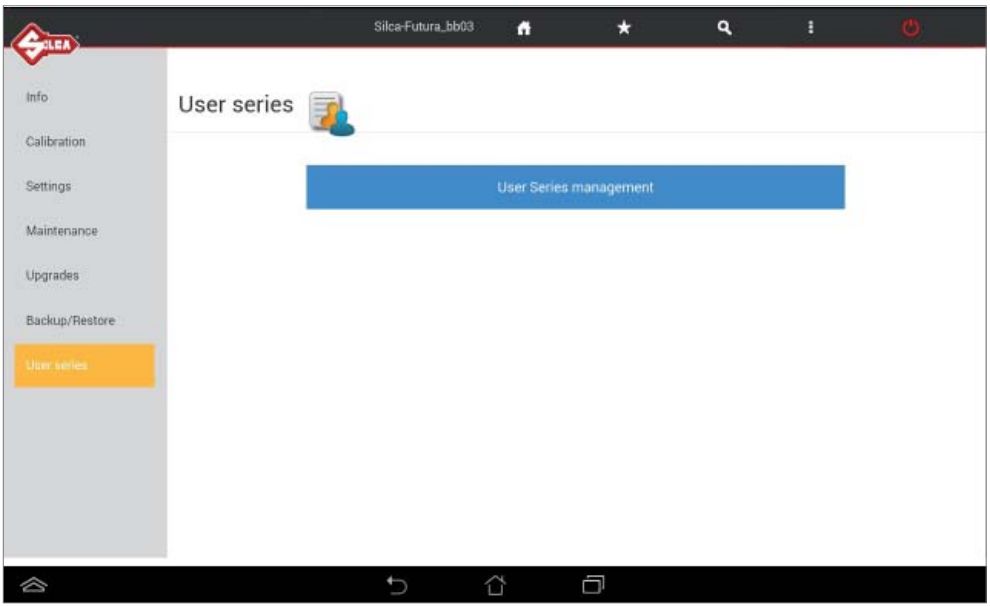

To create the user series, tap “User Series Management”.

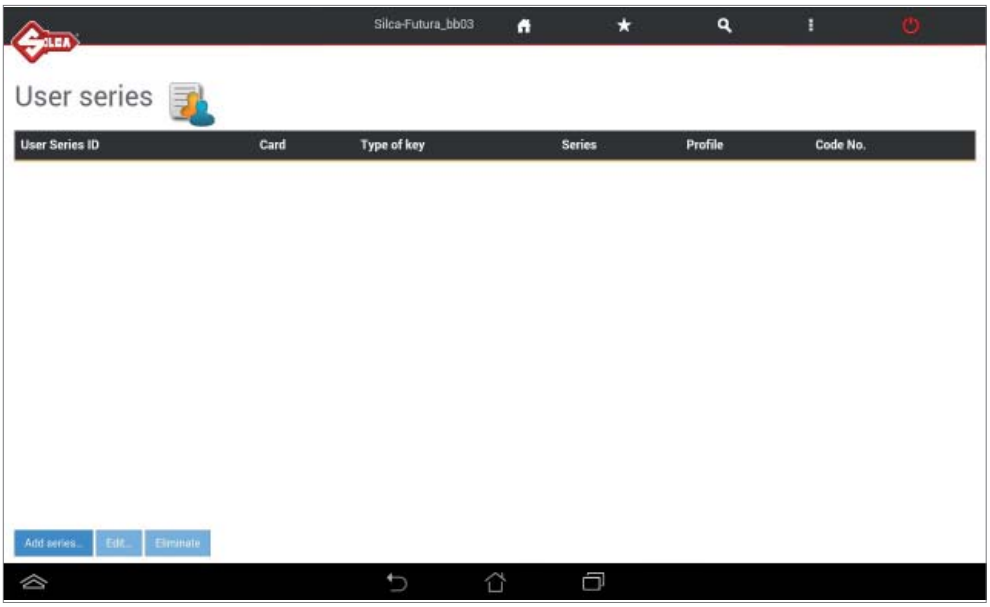

Tap “Add Series” to import the new file.

When the User Series exists and is selected/highlighted you can:

- Tap the “Edit” key to vary certain parameters associated to the series.
- Tap the “Eliminate” key to erase the selected series.

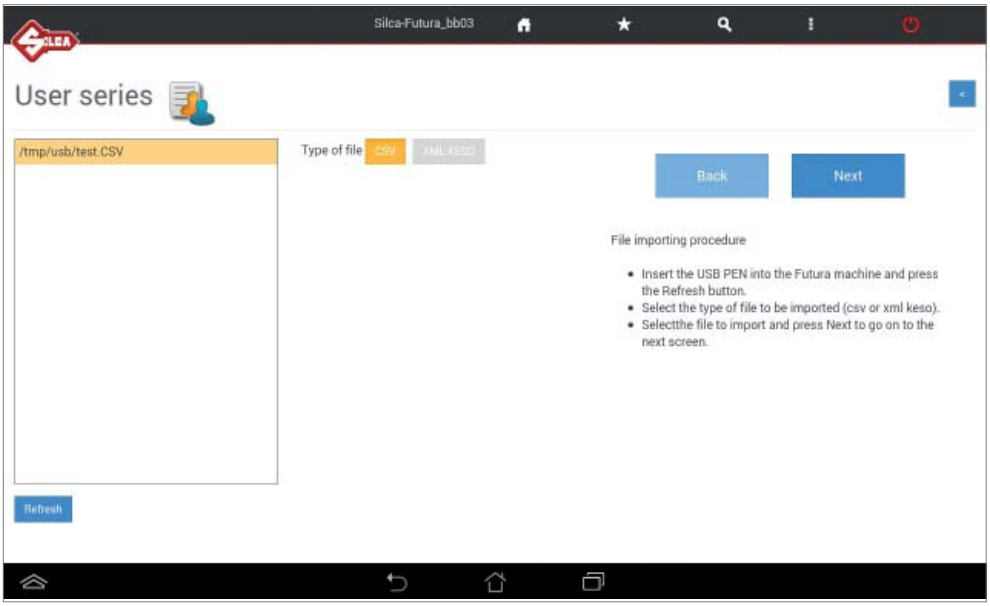

- Follow the instructions on the Tablet page. During guided import you will be required to enter or select certain parameters to associate to the new series (e.g. Data card number, Profile, Series, Makes, Applications and Key blank.
- Tap “Next” to continue.

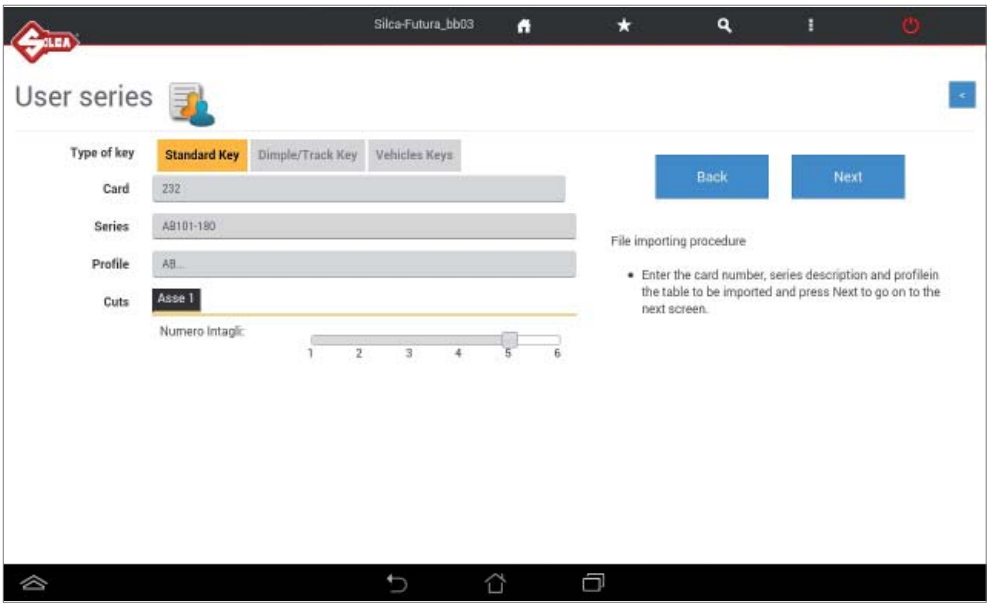

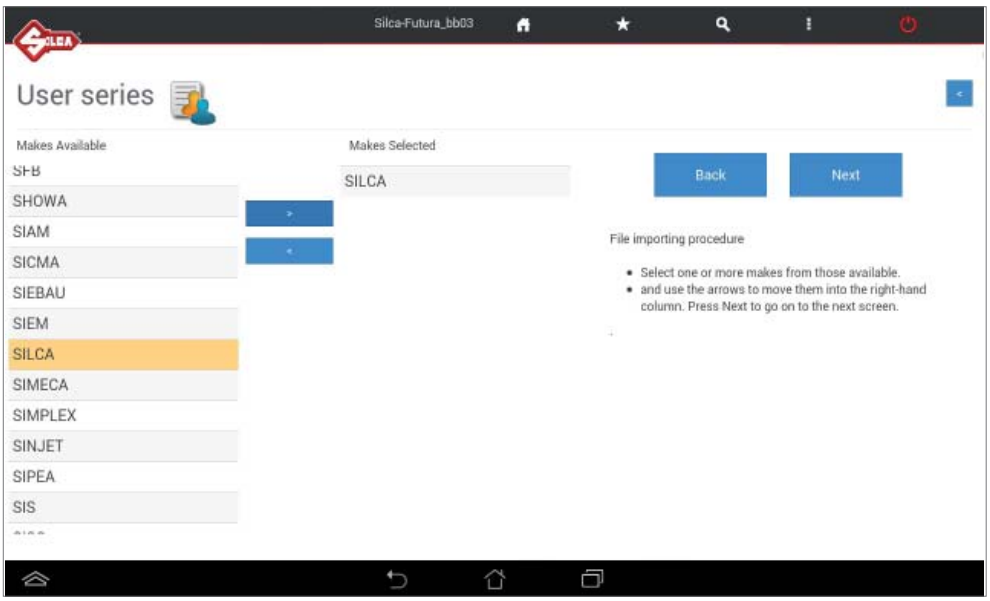

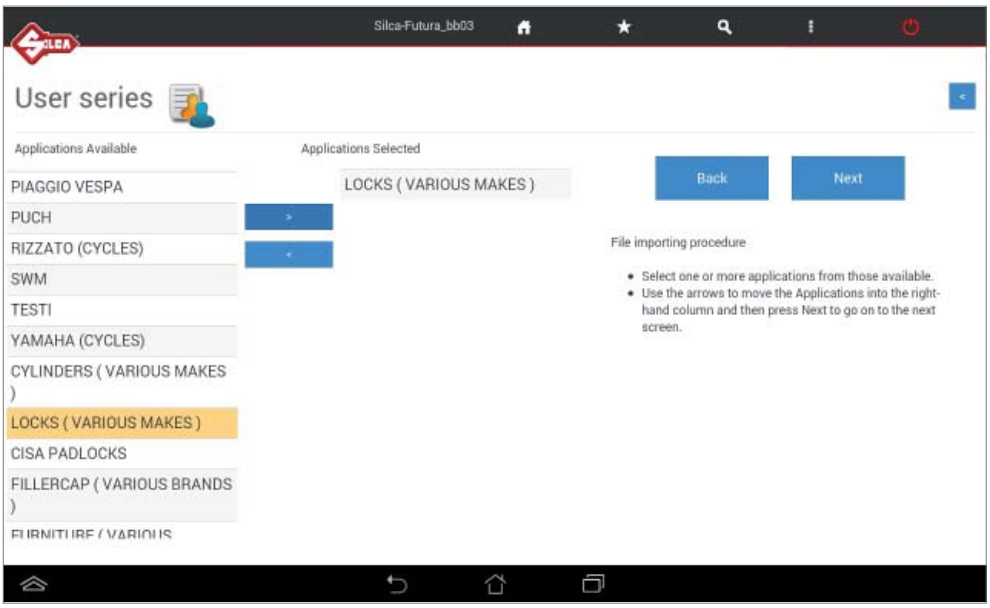

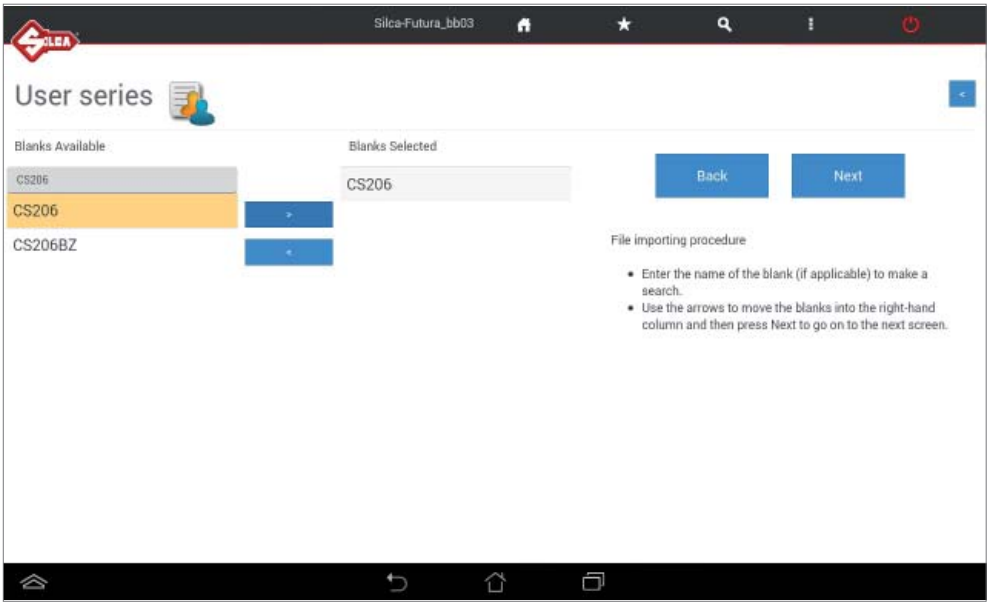

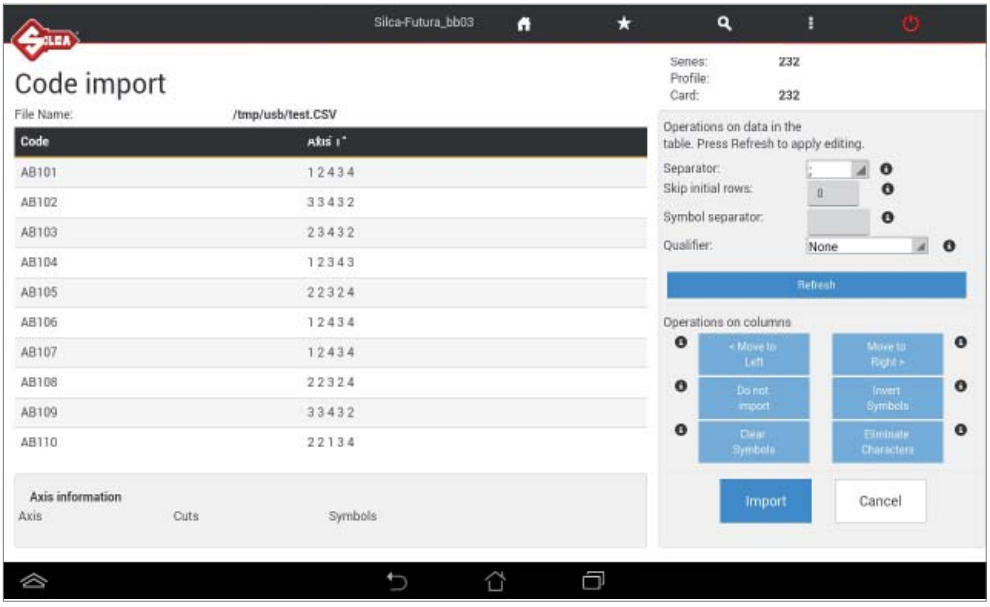

- Tap “Import” to import the file directly without editing.

Note: only if necessary, before terminating table import you can edit certain parameters using the menu on the right (Operation on data in the table and/or Operations on columns):

- Tap to view information about the field.
- After editing the parameters “Operation on data in the table” tap the “Refresh” key”.
- After editing the parameters “Operations on columns” tap the “Import” key to start importing the file.

At the end of the operations the following screen will appear:

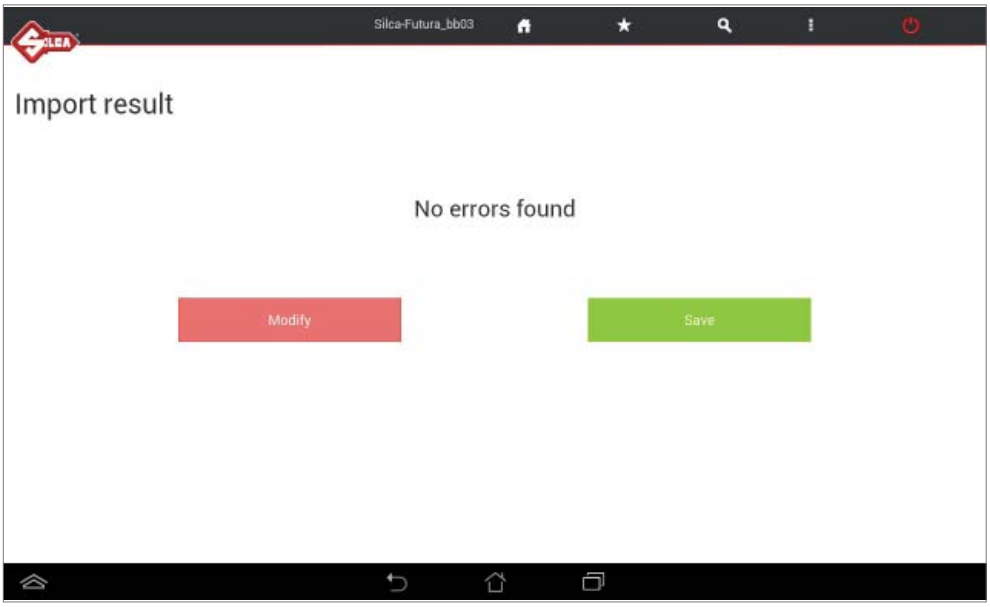

- Tap “Save” to save the new User series.
- Tap “Modify” to make changes.

8 CHANGING TABLETS

If a new tablet is to replace the previous one, download/install the Futura App. and the customized “Silca Keyboard”.
Proceed as follows:

1) Make the Wi-Fi Tablet-Futura connection (see Ch.4.3.3 Network setting).
2) Open the browser CHROME (the CHROME icon is in the Apps page) and enter the following addresses:

   192.168.0.1/Silca.apk to download the App
   192.168.0.1/SilcaKeyboard.apk to download the keyboard

3) Tap the center bottom “Open all Apps screen” icon

4) Open the Android “Download” application  .

5) Tap on the 2 apps just downloaded for installation.

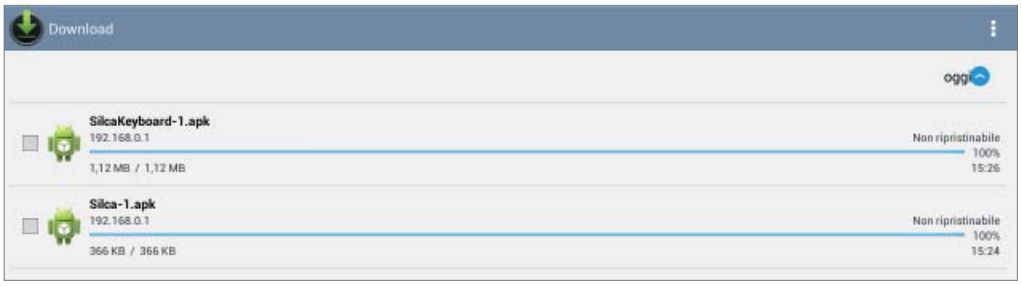

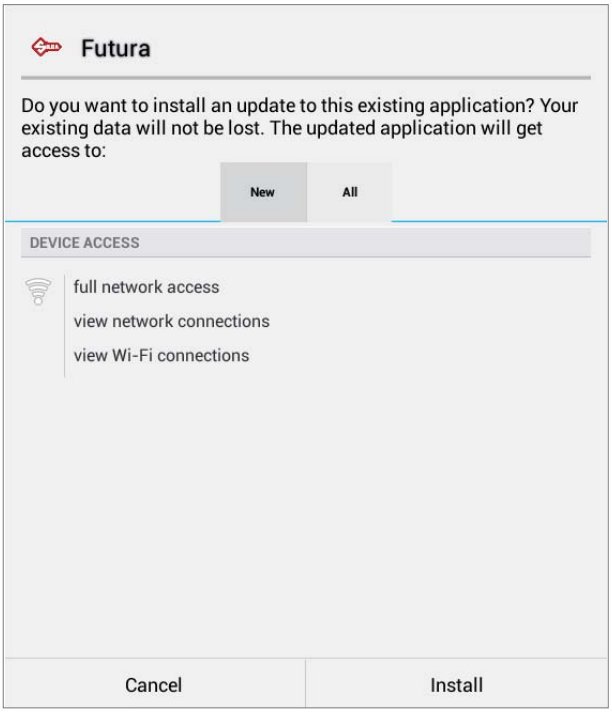

After you install the new Futura application you should move the Silca Futura application icon  to the main screen:

1) Tap the center bottom “Open all Apps screen” icon 

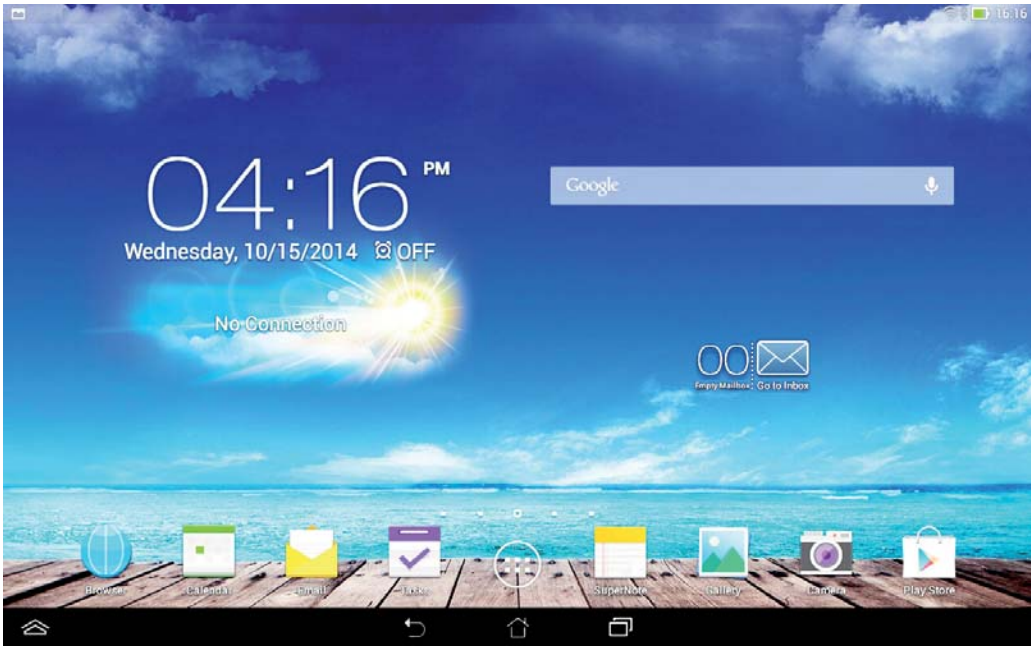

2) Search for “Futura” icon 

3) Tap and hold (keep pressing) the Silca Futura application icon and drag it to the main screen.

9 FUTURA PROCEDURE TO CLEAR CACHE

Clearing the Futura application Cache is recommended to improve the performance of the Futura application.

1) Entering the Android tablet Settings.

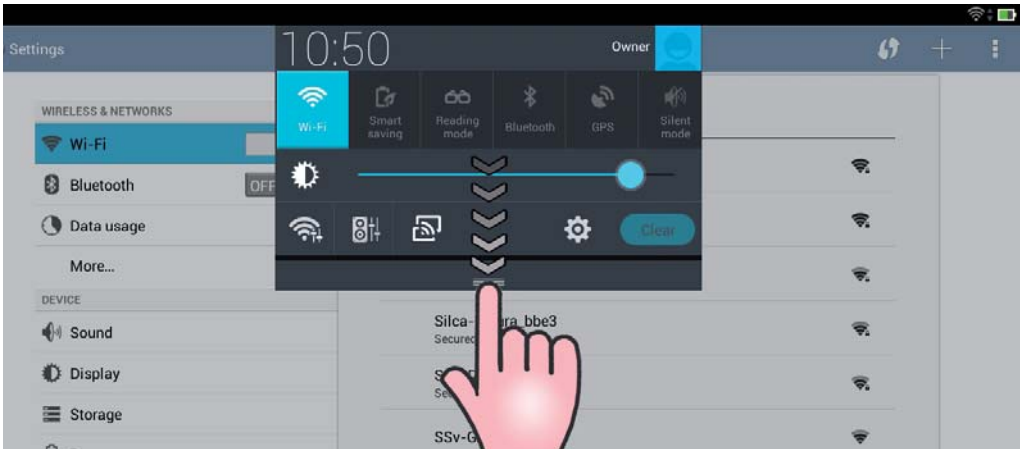

2) Tap on “Apps” and then “Futura”.

3) Tap on “Clear Cache”.

GNU GENERAL PUBLIC LICENSE

This product includes partly software owned by Silca and partly open source software. Below is the original text of the official license for open source software.

On request Silca will provide a DVD with the GPL code included in the FUTURA product.
To make the request contact SILCA at the following address:

SILCA S.p.A.
Via Podgora 20
31020 Vittorio veneto
Italy

Email: service@silca.it

The GPL code used on this product is distributed WITHOUT A WARRANTY and is subject to copyright for one or more writers.

This product also includes software developed by OpenSSL Project for use by the OpenSSL Toolkit.

GNU GENERAL PUBLIC LICENSE
Version 2, June 1991

Preamble

The licenses for most software are designed to take away your freedom to share and change it. By contrast, the GNU General Public License is intended to guarantee your freedom to share and change free software--to make sure the software is free for all its users. This General Public License applies to most of the Free Software Foundation's software and to any other program whose authors commit to using it. (Some other Free Software Foundation software is covered by the GNU Lesser General Public License instead.) You can apply it to your programs, too.

When we speak of free software, we are referring to freedom, not price. Our General Public Licenses are designed to make sure that you have the freedom to distribute copies of free software (and charge for this service if you wish), that you receive source code or can get it if you want it, that you can change the software or use pieces of it in new free programs; and that you know you can do these things.

To protect your rights, we need to make restrictions that forbid anyone to deny you these rights or to ask you to surrender the rights. These restrictions translate to certain responsibilities for you if you distribute copies of the software, or if you modify it.

For example, if you distribute copies of such a program, whether gratis or for a fee, you must give the recipients all the rights that you have. You must make sure that they, too, receive or can get the source code. And you must show them these terms so they know their rights.

We protect your rights with two steps: (1) copyright the software, and (2) offer you this license which gives you legal permission to copy, distribute and/or modify the software.

Also, for each author's protection and ours, we want to make certain that everyone understands that there is no warranty for this free software. If the software is modified by someone else and passed on, we want its recipients to know that what they have is not the original, so that any problems introduced by others will not reflect on the original authors' reputations.

Finally, any free program is threatened constantly by software patents. We wish to avoid the danger that redistributors of a free program will individually obtain patent licenses, in effect making the program proprietary. To prevent this, we have made it clear that any patent must be licensed for everyone's free use or not licensed at all.

The precise terms and conditions for copying, distribution and modification follow.

GNU GENERAL PUBLIC LICENSE
TERMS AND CONDITIONS FOR COPYING, DISTRIBUTION AND MODIFICATION

0. This License applies to any program or other work which contains a notice placed by the copyright holder saying it may be distributed under the terms of this General Public License. The "Program", below, refers to any such program or work, and a "work based on the Program" means either the Program or any derivative work under copyright law: that is to say, a work containing the Program or a portion of it, either verbatim or with modifications and/or translated into another language. (Hereinafter, translation is included without limitation in the term "modification".) Each licensee is addressed as "you".

Activities other than copying, distribution and modification are not covered by this License; they are outside its scope. The act of running the Program is not restricted, and the output from the Program is covered only if its contents constitute a work based on the Program (independent of having been made by running the Program).
Whether that is true depends on what the Program does.

1. You may copy and distribute verbatim copies of the Program's source code as you receive it, in any medium, provided that you conspicuously and appropriately publish on each copy an appropriate copyright notice and disclaimer of warranty; keep intact all the notices that refer to this License and to the absence of any warranty; and give any other recipients of the Program a copy of this License along with the Program.

You may charge a fee for the physical act of transferring a copy, and you may at your option offer warranty protection in exchange for a fee.

2. You may modify your copy or copies of the Program or any portion of it, thus forming a work based on the Program, and copy and distribute such modifications or work under the terms of Section 1 above, provided that you also meet all of these conditions:

a) You must cause the modified files to carry prominent notices stating that you changed the files and the date of any change.

b) You must cause any work that you distribute or publish, that in whole or in part contains or is derived from the Program or any part thereof, to be licensed as a whole at no charge to all third parties under the terms of this License.

c) If the modified program normally reads commands interactively when run, you must cause it, when started running for such interactive use in the most ordinary way, to print or display an announcement including an appropriate copyright notice and a notice that there is no warranty (or else, saying that you provide a warranty) and that users may redistribute the program under these conditions, and telling the user how to view a copy of this License. (Exception: if the Program itself is interactive but does not normally print such an announcement, your work based on the Program is not required to print an announcement.)

These requirements apply to the modified work as a whole. If identifiable sections of that work are not derived from the Program, and can be reasonably considered independent and separate works in themselves, then this License, and its terms, do not apply to those sections when you distribute them as separate works. But when you distribute the same sections as part of a whole which is a work based on the Program, the distribution of the whole must be on the terms of this License, whose permissions for other licensees extend to the entire whole, and thus to each and every part regardless of who wrote it.

Thus, it is not the intent of this section to claim rights or contest your rights to work written entirely by you; rather, the intent is to exercise the right to control the distribution of derivative or collective works based on the Program.

In addition, mere aggregation of another work not based on the Program with the Program (or with a work based on the Program) on a volume of a storage or distribution medium does not bring the other work under the scope of this License.

3. You may copy and distribute the Program (or a work based on it, under Section 2) in object code or executable form under the terms of Sections 1 and 2 above provided that you also do one of the following:

a) Accompany it with the complete corresponding machine-readable source code, which must be distributed under the terms of Sections 1 and 2 above on a medium customarily used for software interchange; or,

b) Accompany it with a written offer, valid for at least three years, to give any third party, for a charge no more than your cost of physically performing source distribution, a complete machine-readable copy of the corresponding source code, to be distributed under the terms of Sections 1 and 2 above on a medium customarily used for software interchange; or,

c) Accompany it with the information you received as to the offer to distribute corresponding source code. (This alternative is allowed only for noncommercial distribution and only if you received the program in object code or executable form with such an offer, in accord with Subsection b above.)

The source code for a work means the preferred form of the work for making modifications to it. For an executable work, complete source code means all the source code for all modules it contains, plus any associated interface definition files, plus the scripts used to control compilation and installation of the executable. However, as a special exception, the source code distributed need not include anything that is normally distributed (in either source or binary form) with the major components (compiler, kernel, and so on) of the operating system on which the executable runs, unless that component itself accompanies the executable.

If distribution of executable or object code is made by offering access to copy from a designated place, then offering equivalent access to copy the source code from the same place counts as distribution of the source code, even though third parties are not compelled to copy the source along with the object code.

4. You may not copy, modify, sublicense, or distribute the Program except as expressly provided under this License. Any attempt otherwise to copy, modify, sublicense or distribute the Program is void, and will automatically terminate your rights under this License.

However, parties who have received copies, or rights, from you under this License will not have their licenses terminated so long as such parties remain in full compliance.

5. You are not required to accept this License, since you have not signed it. However, nothing else grants you permission to modify or distribute the Program or its derivative works. These actions are prohibited by law if you do not accept this License. Therefore, by modifying or distributing the Program (or any work based on the Program), you indicate your acceptance of this License to do so, and all its terms and conditions for copying, distributing or modifying the Program or works based on it.

6. Each time you redistribute the Program (or any work based on the Program), the recipient automatically receives a license from the original licensor to copy, distribute or modify the Program subject to these terms and conditions. You may not impose any further restrictions on the recipients' exercise of the rights granted herein. You are not responsible for enforcing compliance by third parties to this License.

7. If, as a consequence of a court judgment or allegation of patent infringement or for any other reason (not limited to patent issues), conditions are imposed on you (whether by court order, agreement or otherwise) that contradict the conditions of this License, they do not excuse you from the conditions of this License. If you cannot distribute so as to satisfy simultaneously your obligations under this License and any other pertinent obligations, then as a consequence you may not distribute the Program at all. For example, if a patent license would not permit royalty-free redistribution of the Program by all those who receive copies directly or indirectly through you, then the only way you could satisfy both it and this License would be to refrain entirely from distribution of the Program.

If any portion of this section is held invalid or unenforceable under any particular circumstance, the balance of the section is intended to apply and the section as a whole is intended to apply in other circumstances.

It is not the purpose of this section to induce you to infringe any patents or other property right claims or to contest validity of any such claims; this section has the sole purpose of protecting the integrity of the free software distribution system, which is implemented by public license practices. Many people have made generous contributions to the wide range of software distributed through that system in reliance on consistent application of that system; it is up to the author/donor to decide if he or she is willing to distribute software through any other system and a licensee cannot impose that choice.

This section is intended to make thoroughly clear what is believed to be a consequence of the rest of this License.

8. If the distribution and/or use of the Program is restricted in certain countries either by patents or by copyrighted interfaces, the original copyright holder who places the Program under this License may add an explicit geographical distribution limitation excluding those countries, so that distribution is permitted only in or among countries not thus excluded. In such case, this License incorporates the limitation as if written in the body of this License.

9. The Free Software Foundation may publish revised and/or new versions of the General Public License from time to time. Such new versions will be similar in spirit to the present version, but may differ in detail to address new problems or concerns.

Each version is given a distinguishing version number. If the Program specifies a version number of this License which applies to it and "any later version", you have the option of following the terms and conditions either of that version or of any later version published by the Free Software Foundation. If the Program does not specify a version number of this License, you may choose any version ever published by the Free Software Foundation.

10. If you wish to incorporate parts of the Program into other free programs whose distribution conditions are different, write to the author to ask for permission. For software which is copyrighted by the Free Software Foundation, write to the Free Software Foundation; we sometimes make exceptions for this. Our decision will be guided by the two goals of preserving the free status of all derivatives of our free software and of promoting the sharing and reuse of software generally.

NO WARRANTY

11. BECAUSE THE PROGRAM IS LICENSED FREE OF CHARGE, THERE IS NO WARRANTY FOR THE PROGRAM, TO THE EXTENT PERMITTED BY APPLICABLE LAW. EXCEPT WHEN OTHERWISE STATED IN WRITING THE COPYRIGHT HOLDERS AND/OR OTHER PARTIES PROVIDE THE PROGRAM "AS IS" WITHOUT WARRANTY OF ANY KIND, EITHER EXPRESSED OR IMPLIED, INCLUDING, BUT NOT LIMITED TO, THE IMPLIED WARRANTIES OF MERCHANTABILITY AND FITNESS FOR A PARTICULAR PURPOSE. THE ENTIRE RISK AS TO THE QUALITY AND PERFORMANCE OF THE PROGRAM IS WITH YOU. SHOULD THE PROGRAM PROVE DEFECTIVE, YOU ASSUME THE COST OF ALL NECESSARY SERVICING, REPAIR OR CORRECTION.

12. IN NO EVENT UNLESS REQUIRED BY APPLICABLE LAW OR AGREED TO IN WRITING WILL ANY COPYRIGHT HOLDER, OR ANY OTHER PARTY WHO MAY MODIFY AND/OR REDISTRIBUTE THE PROGRAM AS PERMITTED ABOVE, BE LIABLE TO YOU FOR DAMAGES, INCLUDING ANY GENERAL, SPECIAL, INCIDENTAL OR CONSEQUENTIAL DAMAGES ARISING OUT OF THE USE OR INABILITY TO USE THE PROGRAM (INCLUDING BUT NOT LIMITED TO LOSS OF DATA OR DATA BEING RENDERED INACCURATE OR LOSSES SUSTAINED BY YOU OR THIRD PARTIES OR A FAILURE OF THE PROGRAM TO OPERATE WITH ANY OTHER PROGRAMS), EVEN IF SUCH HOLDER OR OTHER PARTY HAS BEEN ADVISED OF THE POSSIBILITY OF SUCH DAMAGES.

END OF TERMS AND CONDITIONS

How to Apply These Terms to Your New Programs

If you develop a new program, and you want it to be of the greatest possible use to the public, the best way to achieve this is to make it free software which everyone can redistribute and change under these terms.

To do so, attach the following notices to the program. It is safest to attach them to the start of each source file to most effectively convey the exclusion of warranty; and each file should have at least the "copyright" line and a pointer to where the full notice is found.

<one line to give the program's name and a brief idea of what it does.>
Copyright (C) <year> <name of author>

This program is free software; you can redistribute it and/or modify it under the terms of the GNU General Public License as published by the Free Software Foundation; either version 2 of the License, or (at your option) any later version.

This program is distributed in the hope that it will be useful, but WITHOUT ANY WARRANTY; without even the implied warranty of MERCHANTABILITY or FITNESS FOR A PARTICULAR PURPOSE. See the GNU General Public License for more details.

You should have received a copy of the GNU General Public License along with this program; if not, write to the Free Software Foundation, Inc., 51 Franklin Street, Fifth Floor, Boston, MA 02110-1301 USA.

Also add information on how to contact you by electronic and paper mail.

If the program is interactive, make it output a short notice like this when it starts in an interactive mode:

Gnomovision version 69, Copyright (C) *year name of author*
Gnomovision comes with ABSOLUTELY NO WARRANTY; for details type `show w'. This is free software, and you are welcome to redistribute it under certain conditions; type `show c' for details.

The hypothetical commands `show w' and `show c' should show the appropriate parts of the General Public License. Of course, the commands you use may be called something other than `show w' and `show c'; they could even be mouse-clicks or menu items--whatever suits your program.

You should also get your employer (if you work as a programmer) or your school, if any, to sign a "copyright disclaimer" for the program, if necessary. Here is a sample; alter the names:

Yoyodyne, Inc., hereby disclaims all copyright interest in the program `Gnomovision' (which makes passes at compilers) written by James Hacker.

<*signature of Ty Coon*>, 1 April 1989 Ty Coon, President of Vice

This General Public License does not permit incorporating your program into proprietary programs. If your program is a subroutine library, you may consider it more useful to permit linking proprietary applications with the library. If this is what you want to do, use the GNU Lesser General Public License instead of this License.

VITTORIO VENETO 04/03/2014

CE DECLARATION OF MACHINE COMPLIANCE

SILCA S.p.A. - VIA PODGORA 20 (Z.I.)
31029 VITTORIO VENETO (TV) - (ITALY)
TEL. 0438 9136 - FAX. 0438 913800

Declares under its own responsibility that the **Key-cutting machine** model

FUTURA

complies with the requirements of the following European Directives:

European Union **DIRECTIVE 2006/42/CE** (Machines)

European Union **DIRECTIVE 2004/108/CE** (Electromagnetic Compatibility)

European Union **DIRECTIVE 1999/5/CE** (R&TTE)

European Union **DIRECTIVE 2006/95/CE** (Low Voltage) **| 14 |**

and with the

EN 55022 :2010
EN 55024 :2010
EN 61000-3-2 :2006 + A1 + A2 :2009
EN 61000-3-3 :2008
EN 301 489-1:2011 (V1.9.2)
EN 301 489-17:2012 (V2.2.1)
ETSI EN 300 328:2012 (V1.8.1)
EN 60825-1:2007
EN 62471:2008
EN 60950-1:2006 + A11:2009 + A1:2010 + A12:2011
EN ISO 12100:2010
EN 62233:2008

Standards

Claudio Tomasella of the Silca S.p.A. Research & Development Division is authorized to create a Technical File.

General Manager Basic Production Center

Stefano Setti

SILCA S.p.A.
Via Podgora, 20 (Z.I.)
31029 VITTORIO VENETO (TV)
Tel. 0438 9136 Fax 0438 913800
E-mail: silca@silca.it
www.silca.biz

Members of the Kaba Group